PEERLESS®

P299638LF

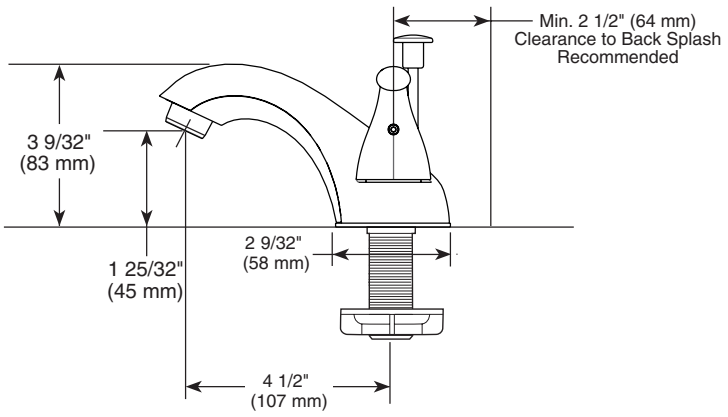

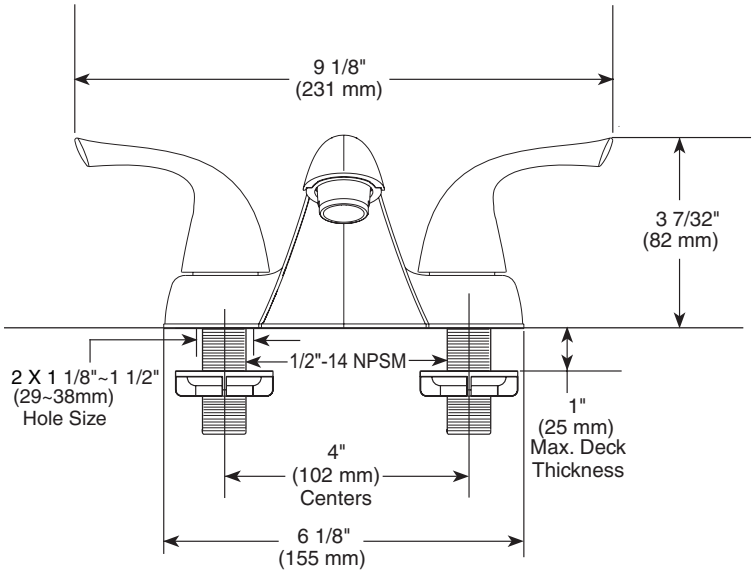

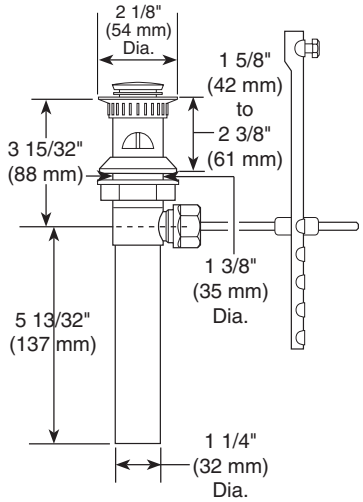

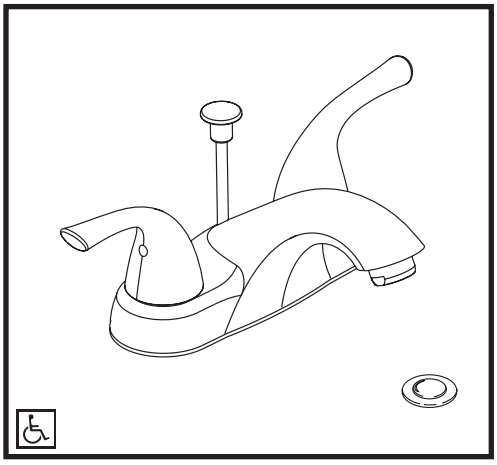

LAVATORY FAUCET

- Two handle, metal lever, centerset lavatory faucet.

STANDARD SPECIFICATIONS

- Two handle lavatory faucets for exposed mounting on 3 hole sinks with 4" centers.
- The fully replaceable, washerless valve design rotates from the full-off position to the full-on position in 90°.
- The valve stems on the hot and cold stems are interchangeable.
- 1/2" - 14 NPSM threaded male inlet shanks.
- Maximum flow rate 1.5 gpm @ 60 PSI.

WARRANTY

- Lifetime Faucet and Finish Limited Warranty to the original consumer purchaser to be free from defects in material and workmanship.
- 5 Year Limited Warranty for usage in all industrial, commercial and business applications.

COMPLIES WITH:

- ASME A112.18.1 / CSA B125.1
- ASME A112.18.2 / CSA B125.2

Indicates compliance to ICC/ANSI A117.1

- EPA WaterSense®

Verified compliant with 0.25% weighted average Pb content regulations.

