PIPE TOOLS & VISES
SINCE 1896

Quick Release™ Tubing Cutters (TC1.6Q models)

Replacement Parts

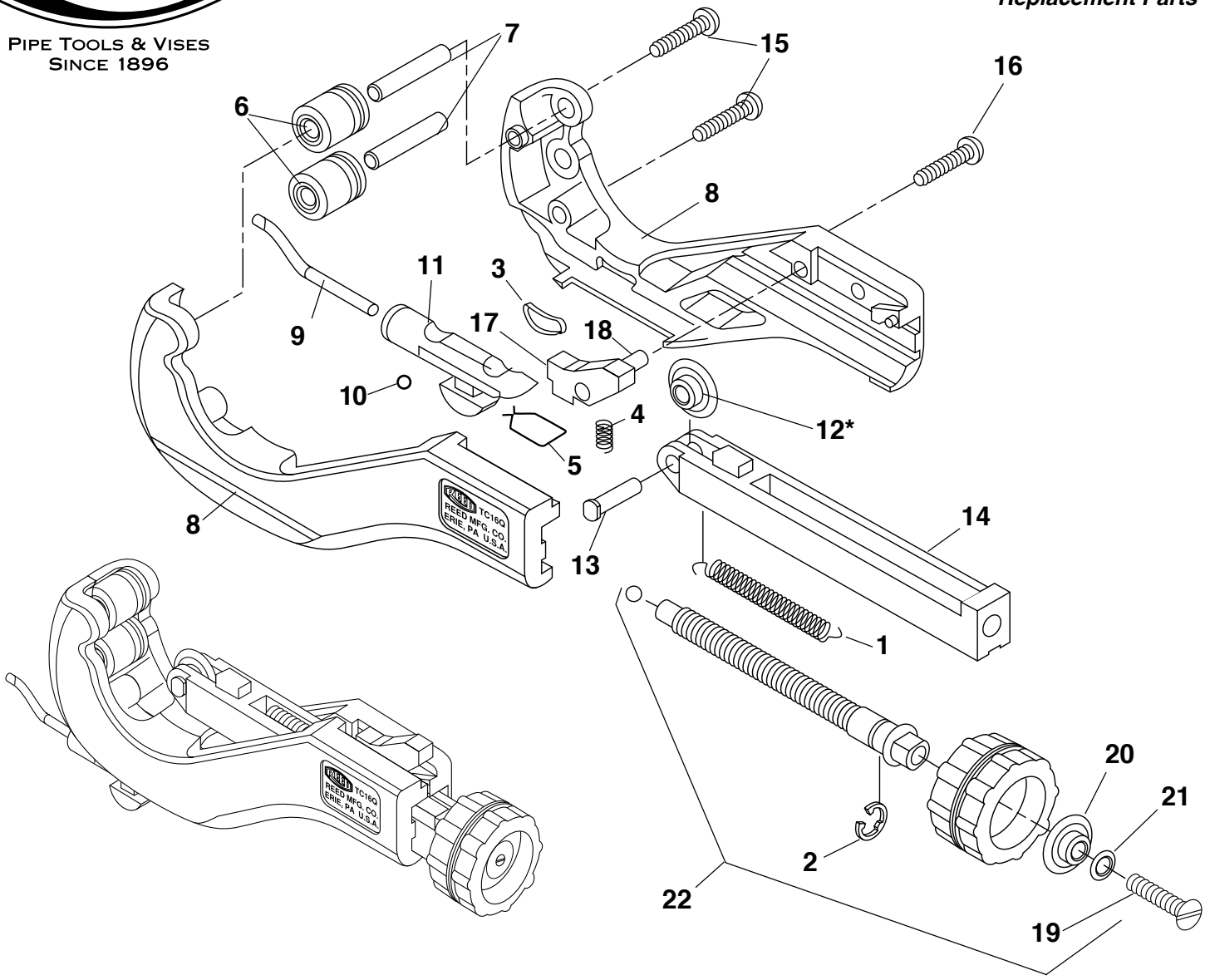

Parts List

Ref. No.	Description	Item Code	Qty. Used
1	Bar Spring	93630	1
2	Retaining Ring	93433	1
3	Flat Spring	40440	1
4	Zip Nut Spring	93440	1
5	Blade Retaining Spring	40437	1
6	Roller	93628	2
7	Roller Pin	40438	2
8	TC1.6Q Body Shell	93620	1
9	Burr Blade / Reamer	94437	1
10	Steel Ball	93447	1
11	Reamer Holder	93625	1

Ref. No.	Description	Item Code	Qty. Used
12*	Cutter Wheel for Copper	03660	1
	Cutter Wheel For CSST	03659	1
	Cutter Wheel For Plastic	04180	1
	Cutter Wheel For PVC	04184	1
13	Wheel Pin	93427	1
14	Bar	93623	1
15	Assembly Screw/Nut End	30222	2
16	Assembly Screw/Roller End	30221	1
17	Feed Nut	93407	1
18	Nut Pin	40439	1
19	Screw	93449	1
20	Extra Cutter Wheel	—	1
21	Washer	93434	1
22	Knob & Screw Assembly	93635	1

Reed Manufacturing
1425 West 8th Street
Erie, PA 16502 USA

QUALITY & Service that Last a Lifetime

Phone: 800-666-3691 or +1-814-452-3691
reedsales@reedmfgco.com
www.reedmfgco.com