PIPE TOOLS & VISES
SINCE 1896

Quick Release™ Tubing Cutters (TC8QP & TC8QPL)

Replacement Parts

Items #1 - #7 and #25 (shaded areas) are not included with the TC8QPL. All other parts are interchangeable.

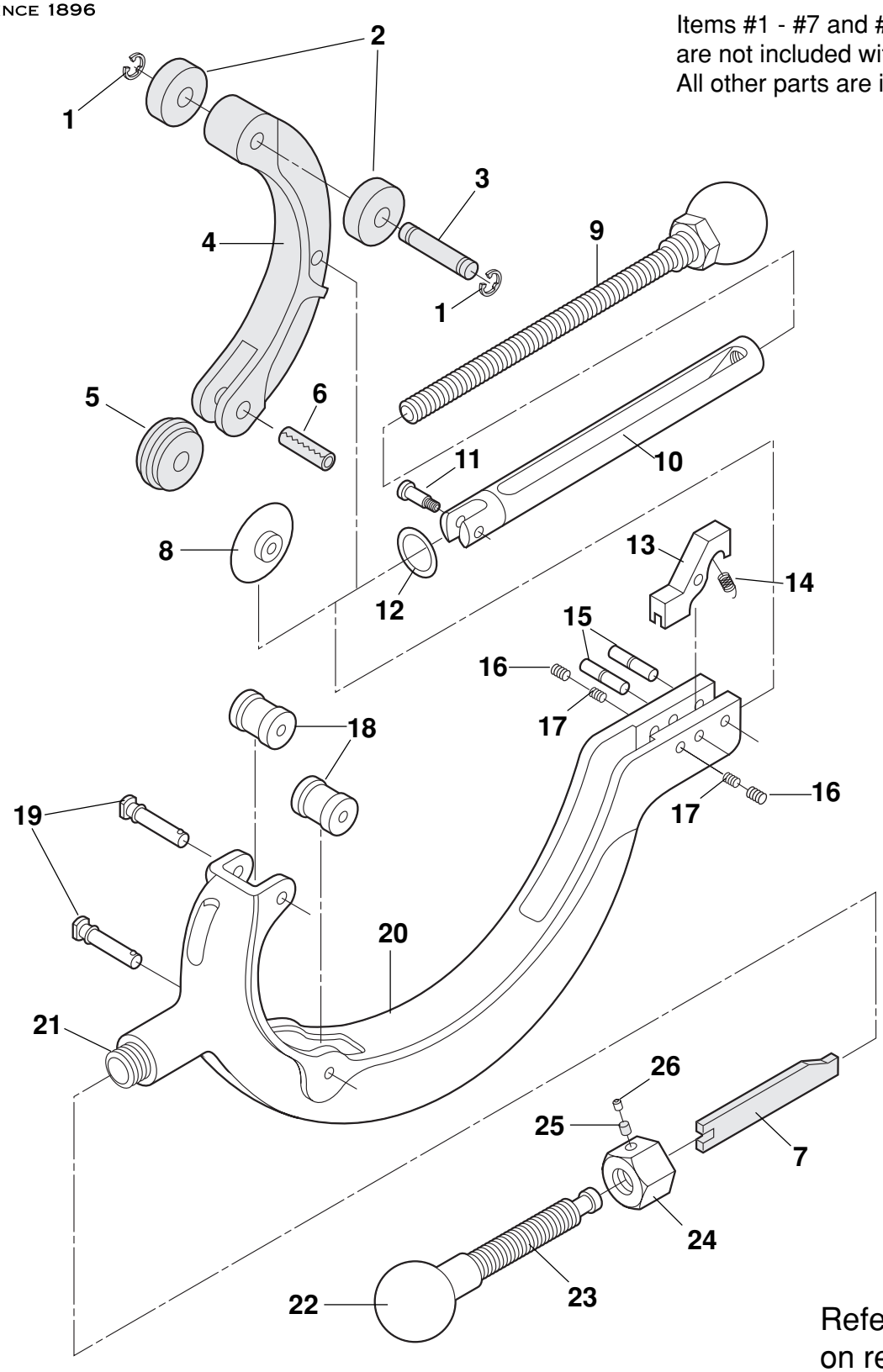

Reference chart on reverse side

Reed Manufacturing Company
1425 West 8th St.
Erie, PA 16502 USA

QUALITY & Service that Last a Lifetime

Phone: 800-666-3691 or 814-452-3691
Fax: 800-456-1697 or 814-455-1697
www.reedmfgco.com

Quick Release™ Tubing Cutters (TC8QP & TC8QPL)

Replacement Parts

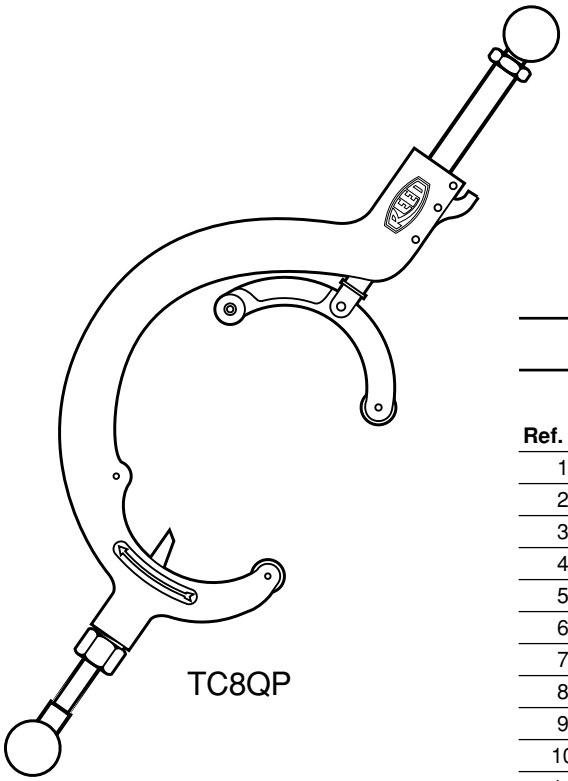

TC8QP

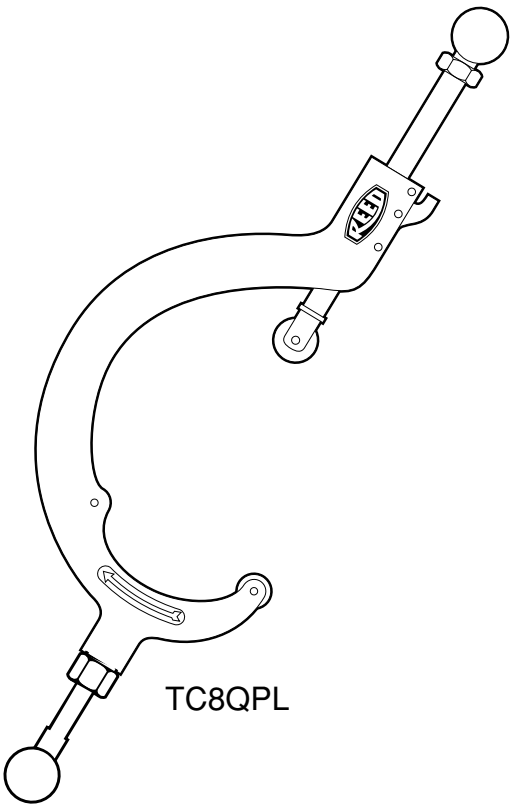

TC8QPL

Parts List

Ref. No.	Description	Item Code	TC8QP Qty. Used	TC8QPL Qty. Used
1	Retaining Ring	30020	2	-
2	3/4 Guide Roller	94025	2	-
3	Guide Roller Pin	94028	1	-
4	Roller Attachment	94026	1	-
5	1/2 Guide Roller	94024	1	-
6	Roll Pin	30017	1	-
7	Parting Tool Blade	04191	1	-
8	Cutter Wheel	04199	1	1
9	Handle & Screw Assembly	94013	1	1
10	Bar	94019	1	1
11	Wheel Screw	93431	1	1
12	Retaining Ring	30016	1	1
13	Zip Nut	40053	1	1
14	Zip Nut Spring	40055	1	1
15	Zip Nut Pivot Screw	94021	2	2
16	Set Screw	40083	2	2
17	Nut Set Screw	30019	2	2
18	Body Roller	94023	2	2
19	Roller Pin Assembly	94029	2	2
20	Body	94018	1	1
21	Barrel	94031	1	1
22	Red Ball Knob	40051	1	1
23	Trim Blade Feed Screw	94016	1	1
24	Trim Blade Cap Nut	94017	1	1
25	Lubrihyde Plug	40052	1	-
26	Set Screw	30018	1	1