KOHLER GENUINE PARTS

Laminar

Laminar wall- or ceiling-mount bath filler with 0.95" orifice
K-923-CP

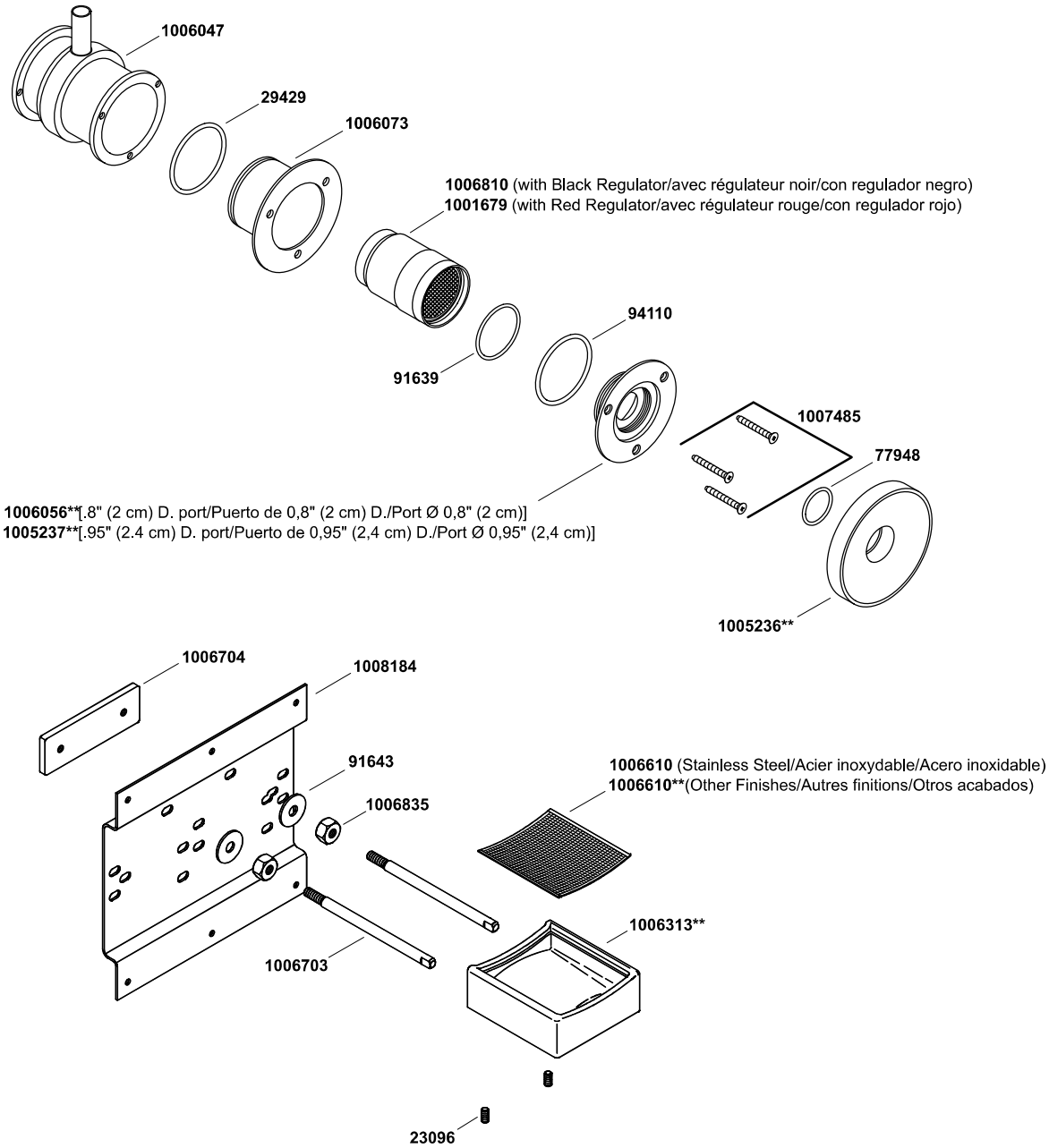

1042737-8-F

© 2015 Kohler Co.