MOEN

Buy it for looks. Buy it for life.®

# Specifications

***There is more than 1 version of this model.***
***Page down to identify the version you have.***

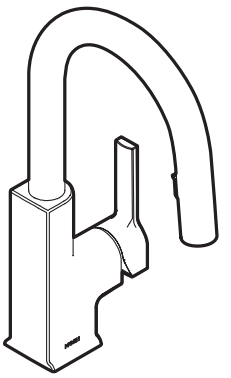

## STō
## Single Handle High Arc Pulldown Prep/Bar Faucet

**Models:** S62308 series

**NOTE:** THIS FAUCET IS DESIGNED TO BE INSTALLED THROUGH 1 HOLE, 1-1/2" (38mm) MIN. DIA.

GREEN UPC ®

### FAUCET DESCRIPTION
- Reflex™ pulldown system offers smooth operation, easy movement and secure docking
- Power Clean™ spray technology
- Metal construction with various finishes identified by suffix
- Duralock™ quick connect
- Pulldown spray with 68" braided hose
- Flexible supply lines with 3/8" compression fittings
- High arc spout provides the perfect height and reach for prep sinks while the pulldown feature provides maneuverability for food preparation tasks
- 360˚ rotating spout
- Faucet designed for handle to be mounted on right side

### OPERATION
- Lever style handle
- Temperature controlled by 100˚ arc of handle travel
- Operates with less than 5 lbs. of force
- Operates in stream or spray mode in the pulldown or retracted position

### FLOW
- Flow is limited to 1.5 gpm (5.7 L/min) at 60 psi

### CARTRIDGE
- 1255™ Duralast™ cartridge for Single-Handle Faucets

### STANDARDS
- Third party certified to IAPMO Green, ASME A112.18.1/CSA B125.1 and all applicable requirements referenced therein including NSF 61/9G & 372
- Meets CalGreen and Georgia SB370 requirements
- Complies with California Proposition 65 and with the Federal Safe Drinking Water Act
- The backflow protection system in the device consists of two independently operating check valves, a primary and a secondary which prevent backflow
- **ADA** for lever handle

### WARRANTY
- Lifetime limited warranty against leaks, drips and finish defects to the original homeowner
- 10 year limited warranty when used in a multifamily installation
- 5 year limited warranty when used in a commercial installation

Visit www.moen.com/support for complete details and limitations

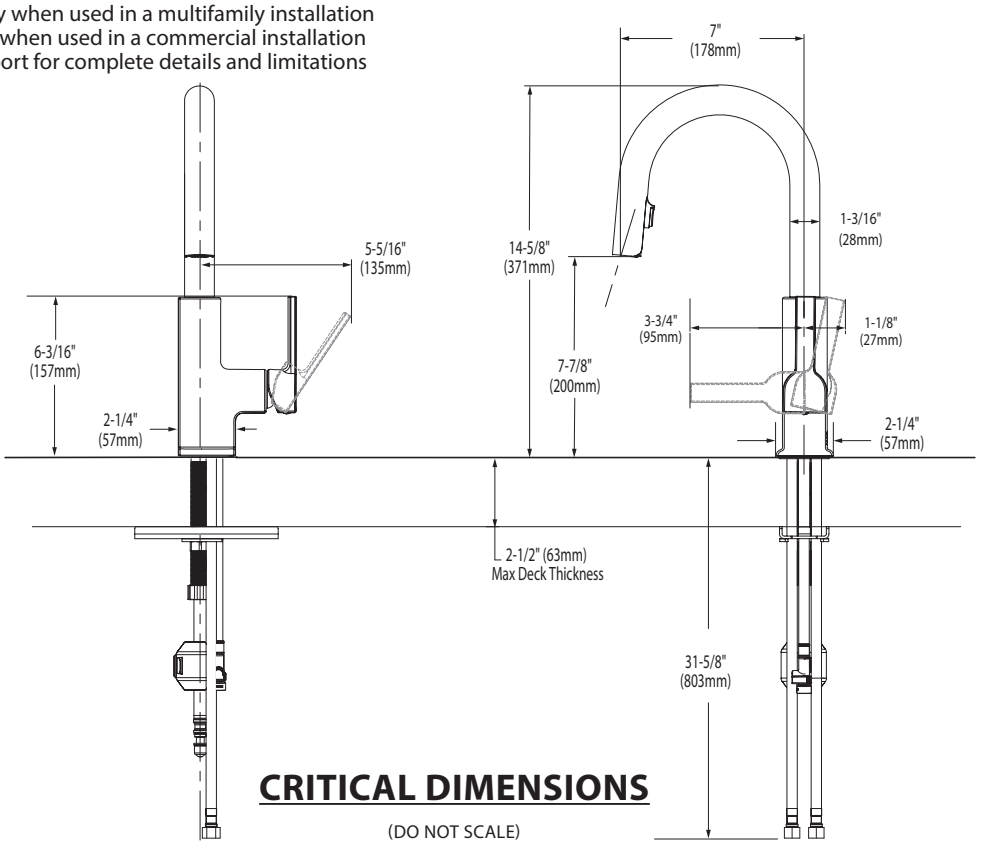


## CRITICAL DIMENSIONS

(DO NOT SCALE)

Rev. 3/17

**TO ORDER PARTS CALL: 1-800-BUY-MOEN**
**www.moen.com**

MOEN

Buy it for looks. Buy it for life.®

# Specifications

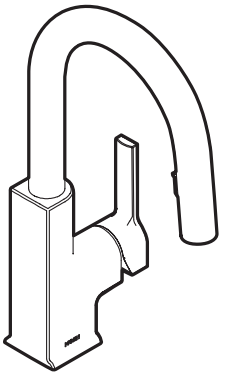

## STō
## Single Handle High Arc Pulldown Prep/Bar Faucet

**Models:** S62308 series

**NOTE:** THIS FAUCET IS DESIGNED TO BE INSTALLED THROUGH 1 HOLE, 1-1/2" (38mm) MIN. DIA.

GREEN UPC ®

### FAUCET DESCRIPTION
- Reflex™ pulldown system offers smooth operation, easy movement and secure docking
- Power Clean™ spray technology
- Metal construction with various finishes identified by suffix
- Quick connect installation
- Pulldown spray with 68" braided hose
- Flexible supply lines with 3/8" compression fittings
- High arc spout provides the perfect height and reach for prep sinks while the pulldown feature provides maneuverability for food preparation tasks
- 360˚ rotating spout
- Faucet designed for handle to be mounted on right side

### OPERATION
- Lever style handle
- Temperature controlled by 100˚ arc of handle travel
- Operates with less than 5 lbs. of force
- Operates in stream or spray mode in the pulldown or retracted position

### FLOW
- Flow is limited to 1.5 gpm (5.7 L/min) at 60 psi

### CARTRIDGE
- 1255™ Duralast™ cartridge for Single-Handle Faucets

### STANDARDS
- Third party certified to IAPMO Green, ASME A112.18.1/CSA B125.1 and all applicable requirements referenced therein including NSF 61/9G & 372
- Meets CalGreen and Georgia SB370 requirements
- Complies with California Proposition 65 and with the Federal Safe Drinking Water Act
- The backflow protection system in the device consists of two independently operating check valves, a primary and a secondary which prevent backflow
- **ADA** for lever handle

### WARRANTY
- Lifetime limited warranty against leaks, drips and finish defects to the original homeowner
- 10 year limited warranty when used in a multifamily installation
- 5 year limited warranty when used in a commercial installation

Visit www.moen.com/support for complete details and limitations

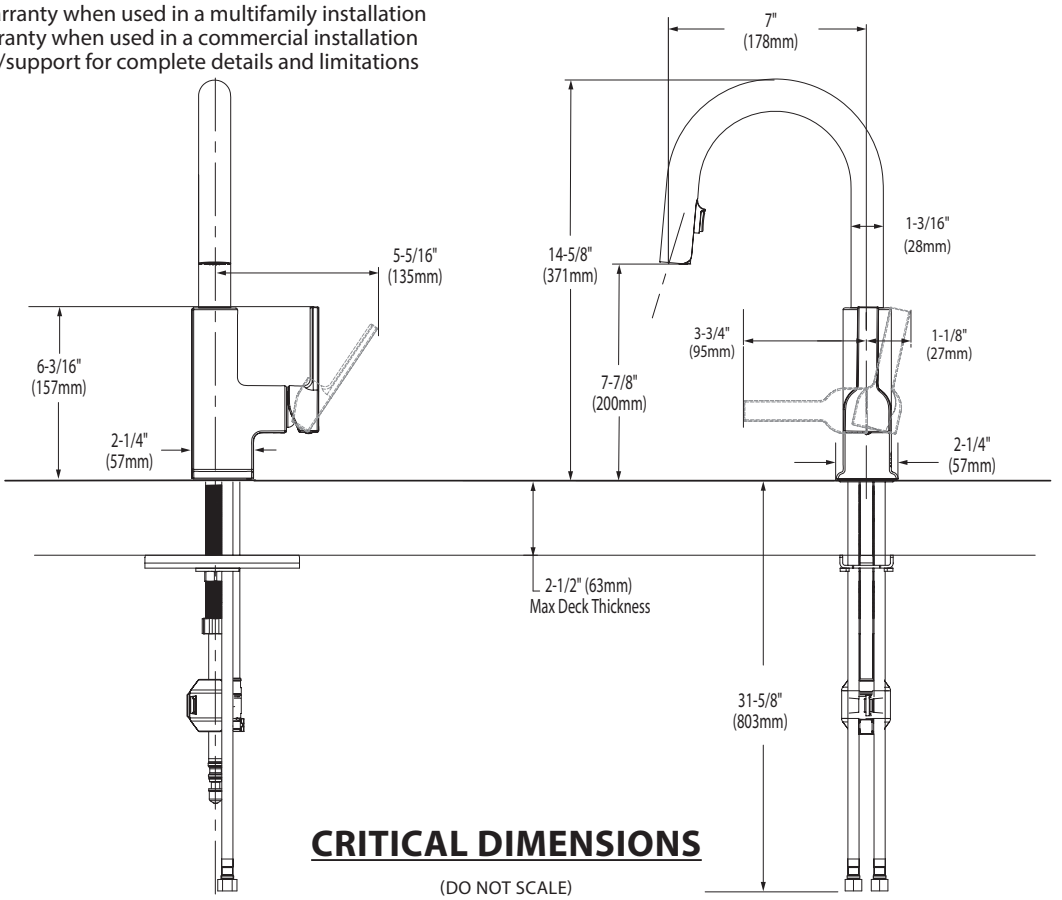


## CRITICAL DIMENSIONS

(DO NOT SCALE)

Rev. 3/17

**TO ORDER PARTS CALL: 1-800-BUY-MOEN**
**www.moen.com**

DWG/TDS: SPC15715 - 3000005642
Released101