PIPE TOOLS & VISES
SINCE 1896

Tubing Cutters (TC4Q, TC5Q, TC6Q)

Replacement Parts

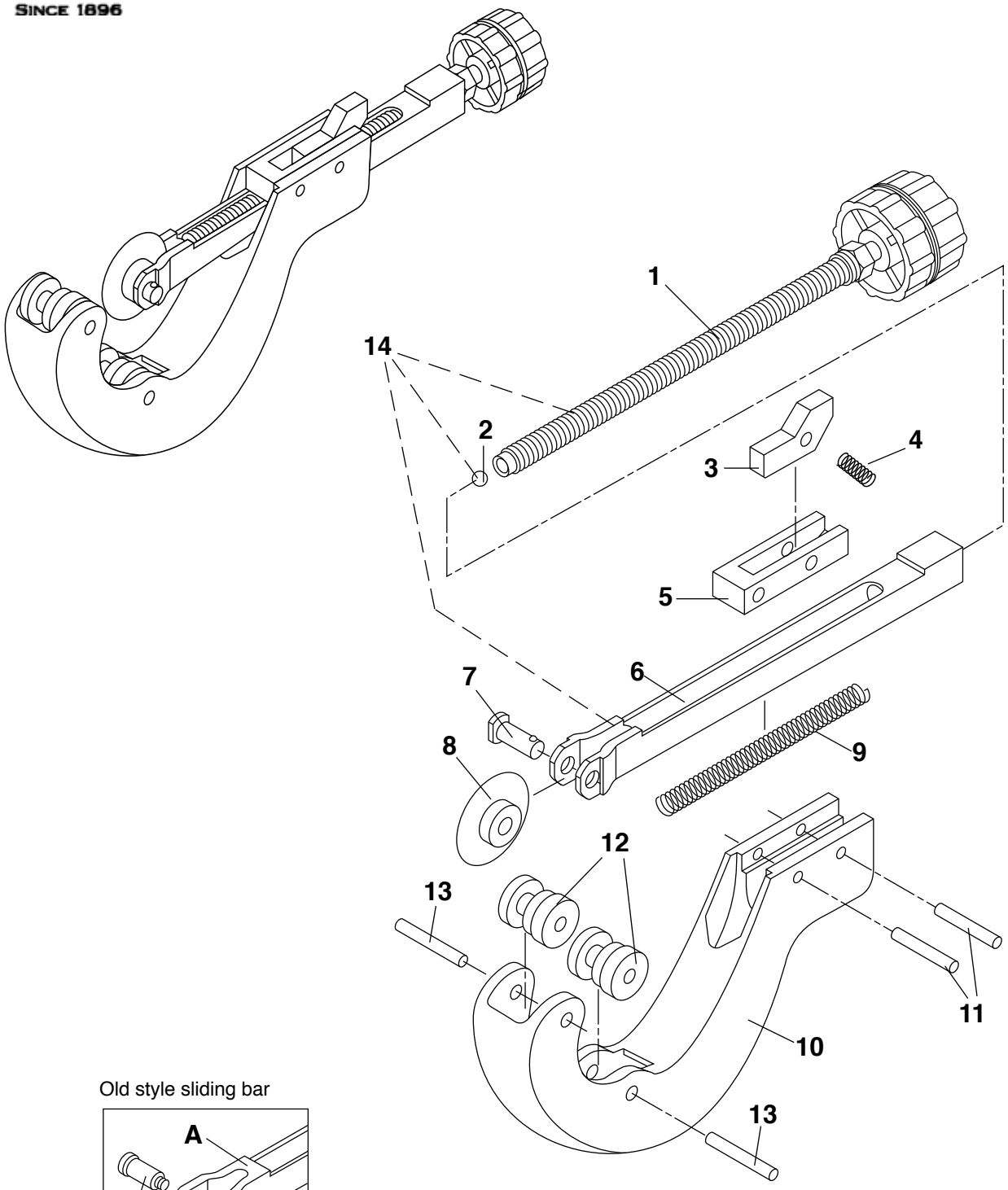

Old style sliding bar

A 93467 Slide Bar
B 93431 Wheel Pin Screw

Reference chart
on reverse side

Reed Manufacturing Company
1425 West 8th Street
Erie, PA 16502 USA

QUALITY & Service
that Last a Lifetime

Phone: 800-666-3691 or 814-452-3691
Fax: 800-456-1697 or 814-455-1697
www.reedmfgco.com

Parts List

Ref. No.	Description	TC4Q Item Code	TC5Q Item Code	TC6Q Item Code	Qty. Used
1	Handle & Screw Assembly	93423	93423	93423	1
2	Steel Ball	93447	93447	93447	1
3	Zip Nut	93408	93408	93408	1
4	Zip Nut Spring	93442	93442	93442	1
5	Filler Block	93460	93460	93460	1
6	Sliding Bar	93470	93695	93695	1
7	Wheel Screw	93445	93445	93445	1
8	Cutter Wheel (for copper)	03665	03665	03665	1
	Cutter Wheel (for plastic)	04190	04190	04190	1
	Cutter Wheel (for muffler tubing systems)	03670	03670	03670	1
9	Bar Spring	93412	93412	93412	1
10	Body	93193	93454	93455	1
11	Block Pin	30038	30038	30038	2
12	Large Roller	93420	93420	93420	2
13	Roller Pin	93437	93437	93437 (4 pins)	2
14	Sliding Bar Assembly	93409	93194	93194	1
	*Sliding Bar Assembly listed above consists of #1, #2 & #6				

- Old style item code number for #7 Sliding Bar for TC4Q and TC5Q - #93467, for TC6Q - #93695
- Old style item code number for #8 Wheel Screw for TC4Q, TC5Q and TC6Q, #93431
- For old style TC4Q body, use block pin #93462