IC1A, IC1S

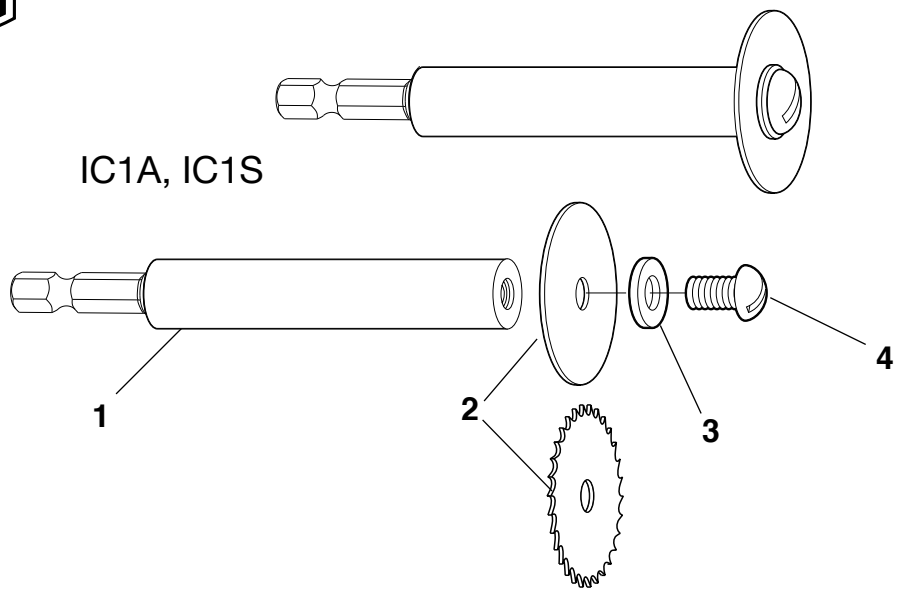

IC1AL, IC1SL or IC3/4SL

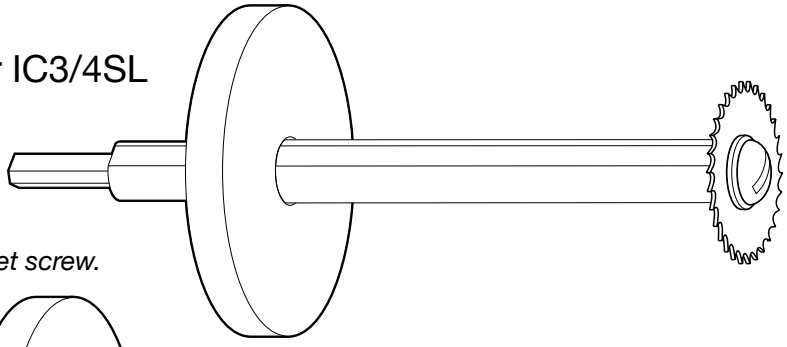

Flat area of shaft must align with set screw.

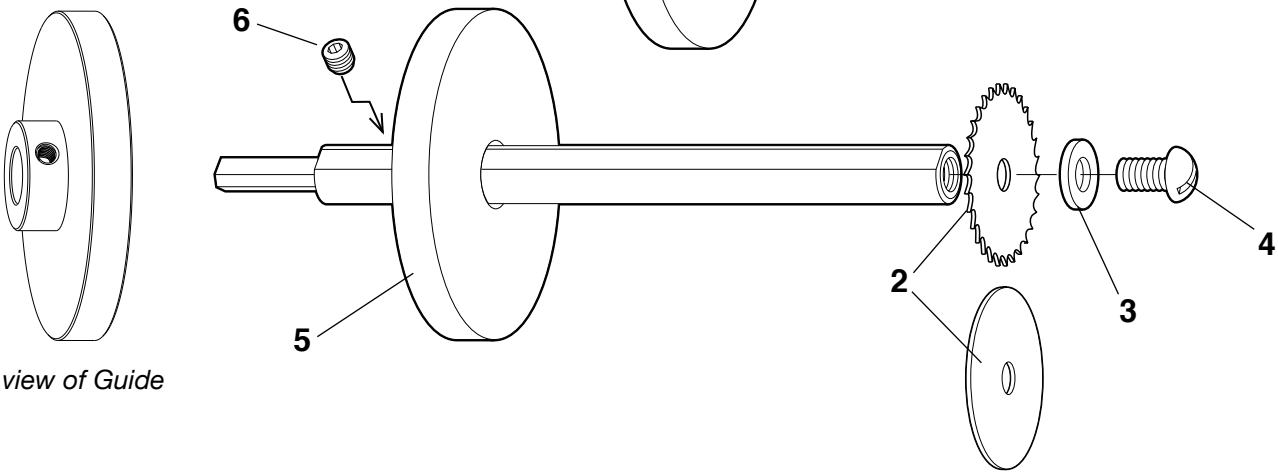

Side view of Guide

Parts List

Ref. Number	Description	IC1A Item Code	IC1S Item Code	IC1SL Item Code	IC3/4SL Item Code	IC1AL Item Code	IC3/4S Item Code
1	Shaft	94502	94502	94503	44503	94503	44502
2	Blade	04502	04503	04503	04508	04503	04508
3	Washer	30080	30080	30080	34507	30080	34507
4	Screw	30122	30122	30122	34506	30122	34506
5	Guide	-	-	94504	44504	94504	-
6	Set Screw	-	-	97544	34508	97544	-

Reed Manufacturing Company
1425 West 8th Street
Erie, PA 16502 U.SA

QUALITY & Service that Last a Lifetime

Phone: 800-666-3691 or 814-452-3691
Fax: 800-456-1697 or 814-455-1697
www.reedmfgco.com