hansgrohe

Metris
Single-Hole Faucet 110 with Pop-Up Drain, 1.2 GPM
Finishes : **chrome** Part no. : **31080001**

Description

Features

- Aerated spray
- Flow: 1.2 GPM (4.5 L/Min)
- Ceramic cartridge
- Includes pop-up drain

Item details

Technology

Eco Right
Quick Clean
Comfort Zone

Compliance

WaterSense Meets EPA Criteria
UPC
ADA

Product image

Scale drawing

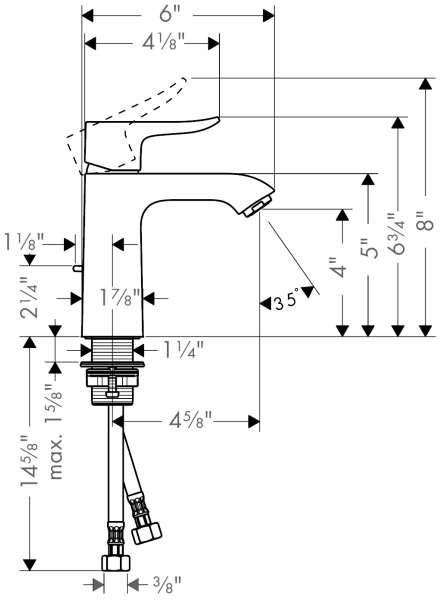

More details are available on our website www.hansgrohe-usa.com We look forward to seeing you
2/25/19