Steel Queen Undermount Sink QSUA1820-8N | 122.0620.086

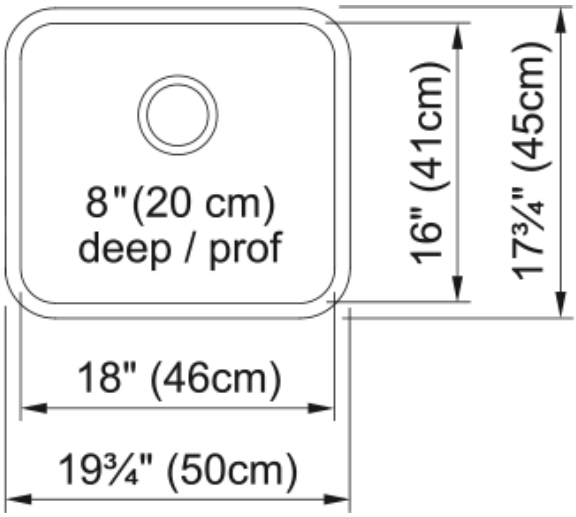

Technical Data

Aspect	
Sink type	Sink
Type of material	Stainless steel
Number of bowls	1
Color	Steel
Surface finsh	Silk
Product Dimensions	
Exterior size: right to left	19.685
Exterior size: front to back	17.717
Large bowl size: right to left	18.11
Large bowl size: front to back	16.142
Large bowl: depth	7.874
Installation	
Minimum cabinet size	24''
Product specifications	
Installation type	Undermount
Drain hole	3 1/2"
Position of drainer	No drainer
Product identification	
Product brand	Kindred
Collection	Steel Queen
Certified by	CSA
Features	
Drainers number	No drainer
Product reversibility	No
Faucet ledge	No
Strainer assembly included	No
Strainer assembly type	No waste kit

KINDRED
kindred-sinkware.com

Overflow	No
Number of faucet holes	No faucet hole
Soap dispenser hole	No