Mr. Heater MH4B • Base Camp MH4BC

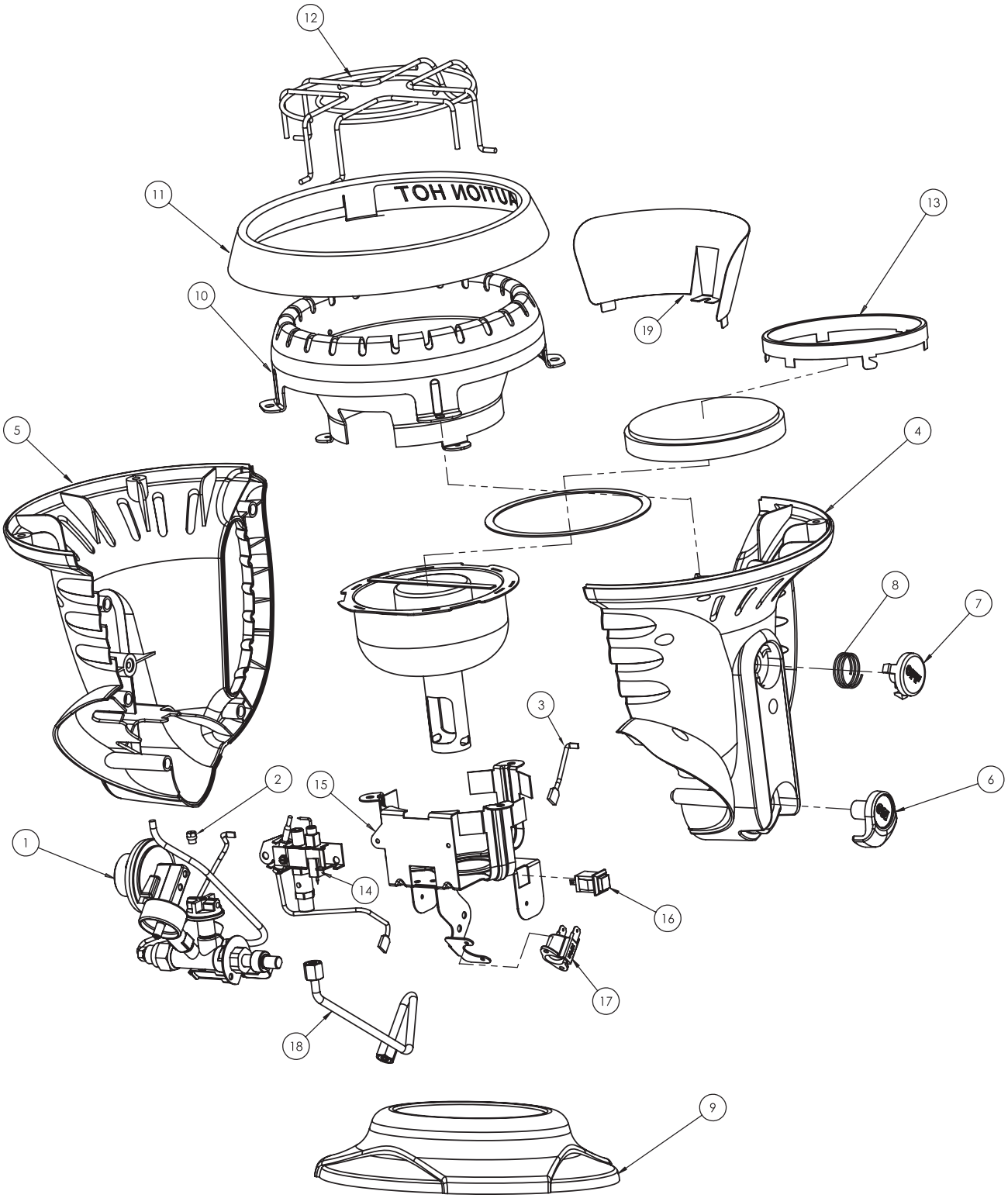

PARTS LIST:

SEE BACK PAGE FOR PARTS ORDERING INFORMATION

ITEM NO.	PART NUMBER	DESCRIPTION	
1	15161	Regulator/Valve Assembly	1
2	15151	Orifice	1
3	15163	Off Button Wire	1
4	15126	Left Housing	1
5	15128	Right Service Housing	1
6	15122	On Button	1
7	15123	Off Button	1
8	15165	Off Button Spring	1
9	15124	Tank Base	1
10	15157	Reflector Panel	1
11	15158	Reflector Ring	1
12	15162	Wire Guard	1
13	15138	Burner Assembly	1
14	15155	ODS/Pilot Assembly	1
15	15153	Burner Bracket	1
16	15145	Off Switch	1
17	73403	Tipover Switch	1
18	15148	Pilot Fuel Line	1
19	15154	Heat Shield	1

NOTES: