110042

Rough-in for Push-Button Diverter

see what Delta can do™

Models
R97701
R97703
R97705

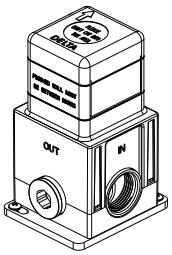

R97701

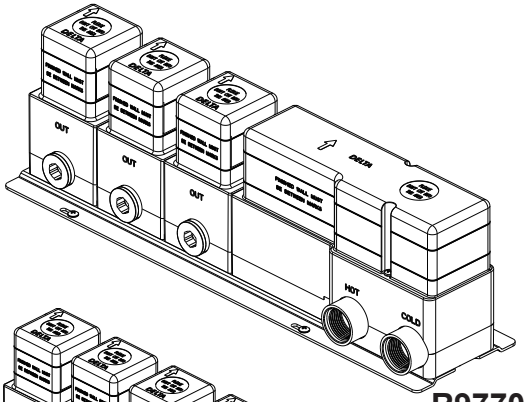

R97703

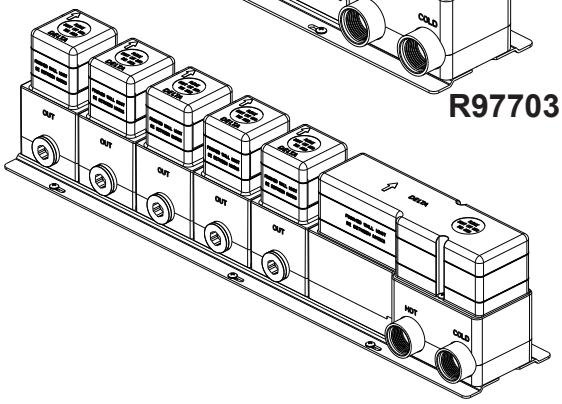

R97705

Write purchased model number here.

You may need:

R97701

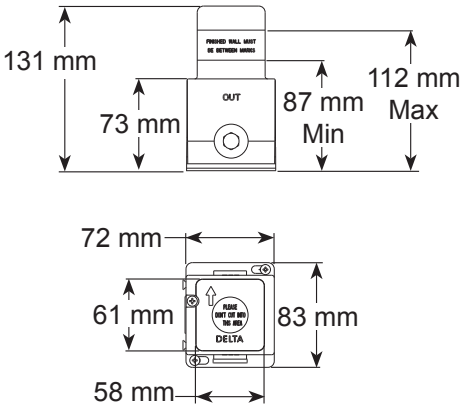

R97703

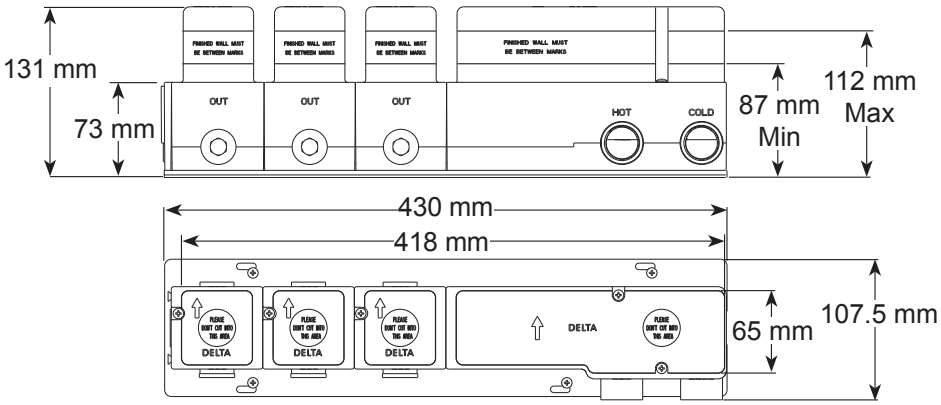

R97705

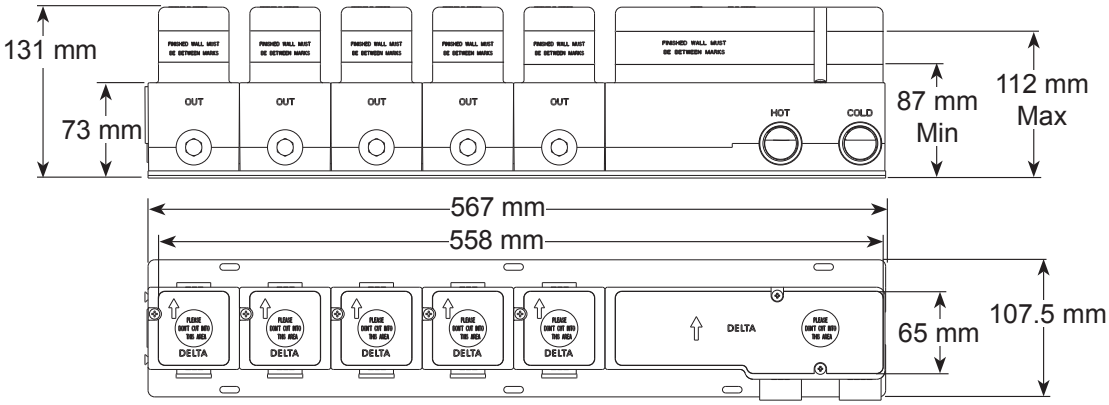

110042

1

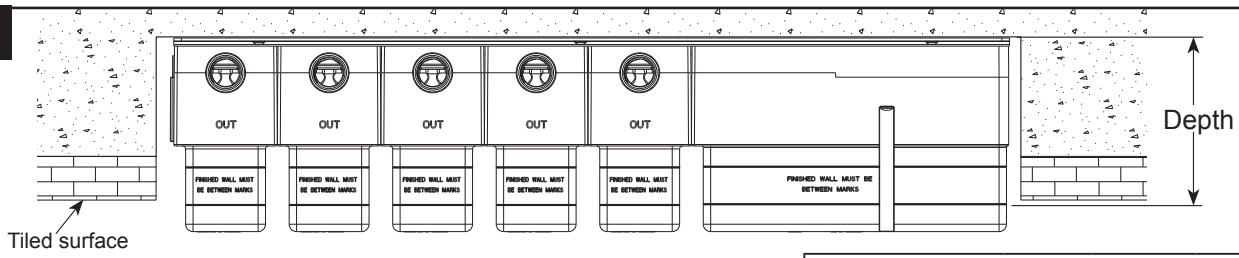

Recommend the hole size			
Model	Length	Width	Depth
R97705 (5-Outlet)	667mm	207mm	87~112mm
R97703 (3-Outlet)	530mm	207mm	87~112mm
R97701 (1-Outlet)	172mm	183mm	87~112mm

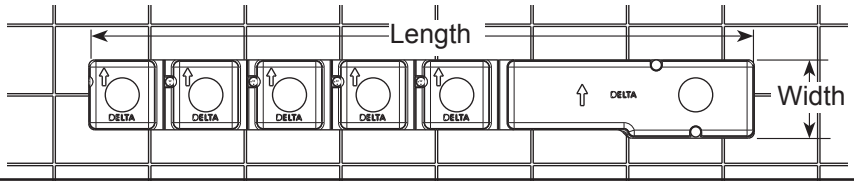

Recommend the tile cut-out size		
Model	Length	Width
R97705 (5-Outlet)	561mm	68mm
R97703 (3-Outlet)	421mm	68mm
R97701 (1-Outlet)	64mm	61mm

Dig the hole base on the hole size. Notice:FINISHED WALL MUST BE BETWEEN MARKS.

2

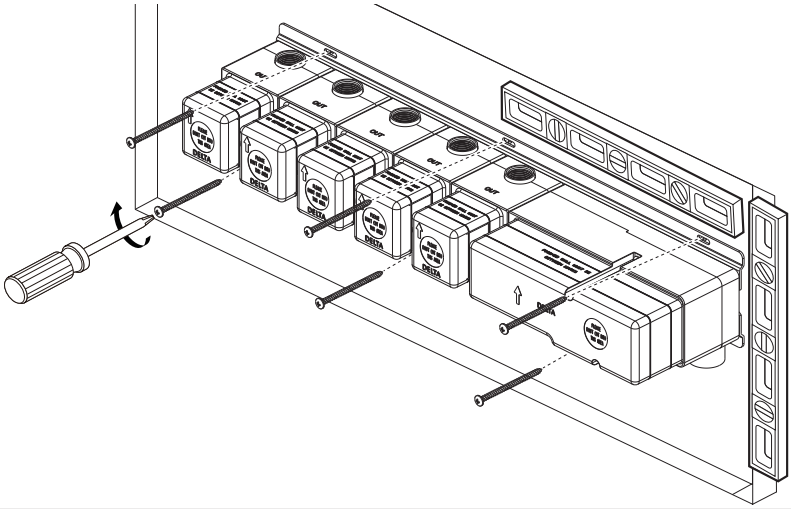

Use Levelling meter to make Sure that Rough is level in horizontal and vertical directions

Secure the body against wall with screws. Make sure rough is level in the horizontal and vertical directions.

3A Connected from above

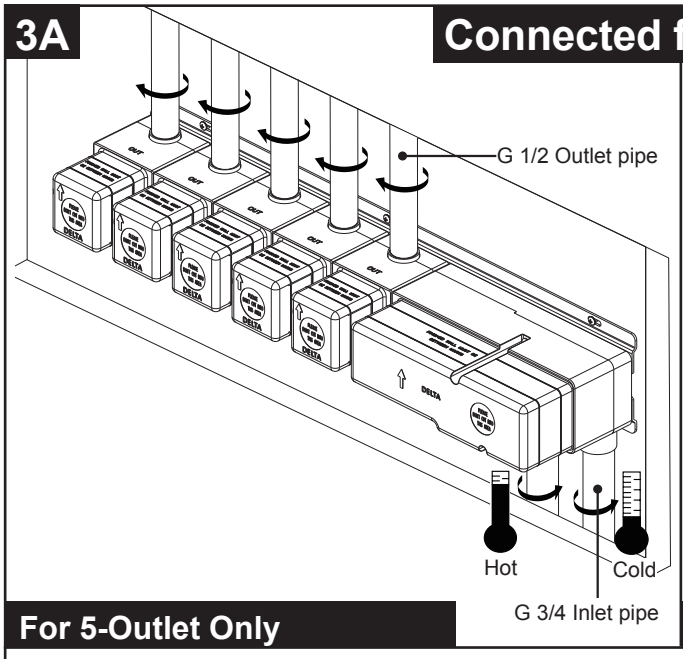

For 5-Outlet Only

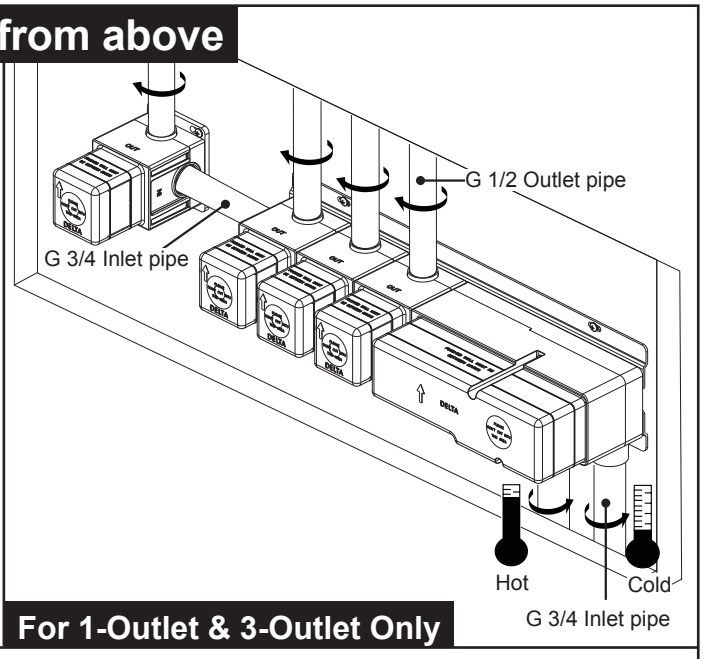

For 1-Outlet & 3-Outlet Only

MAKE CONNECTIONS TO WATER LINES.
Install water inlet pipe and water outlet pipe.

3B Connected from bottom

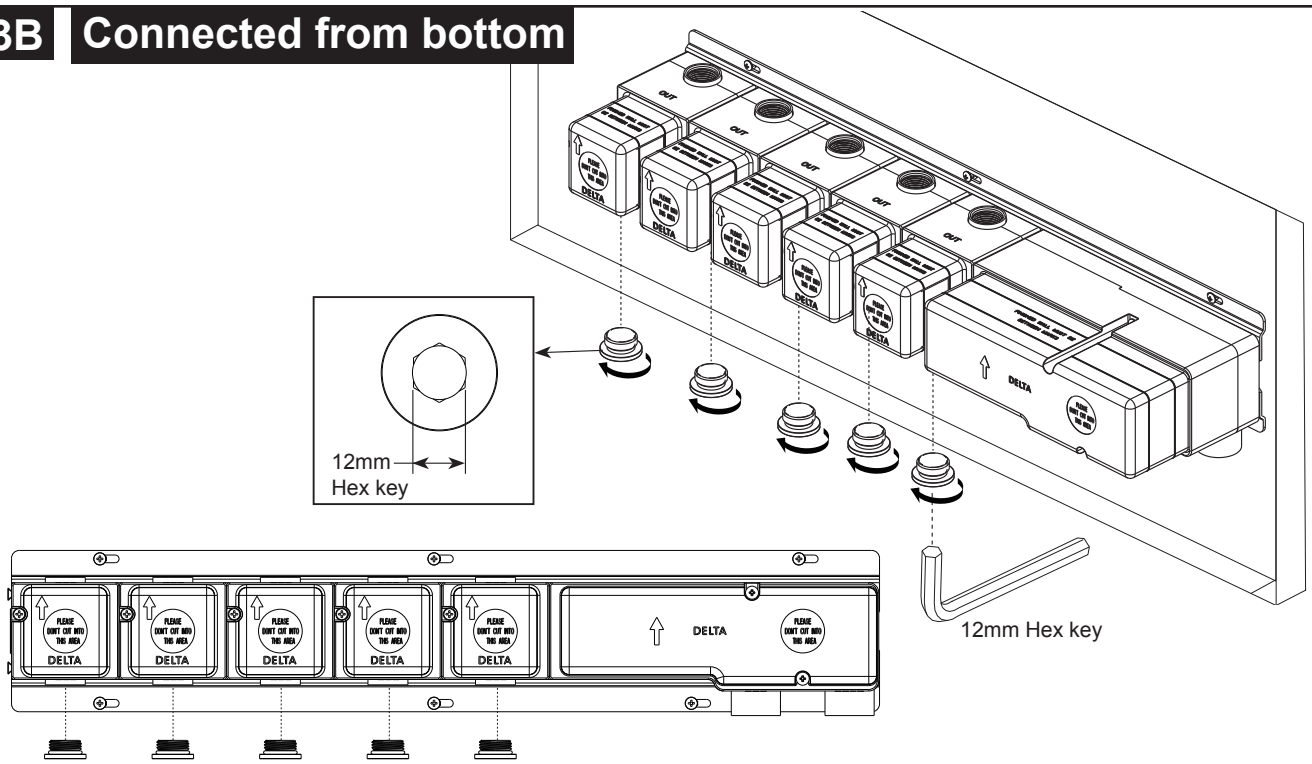

MAKE CONNECTIONS TO WATER LINES.
Remove adaptor kit from bottom with 12" Allen wrench.

3C Connected from bottom

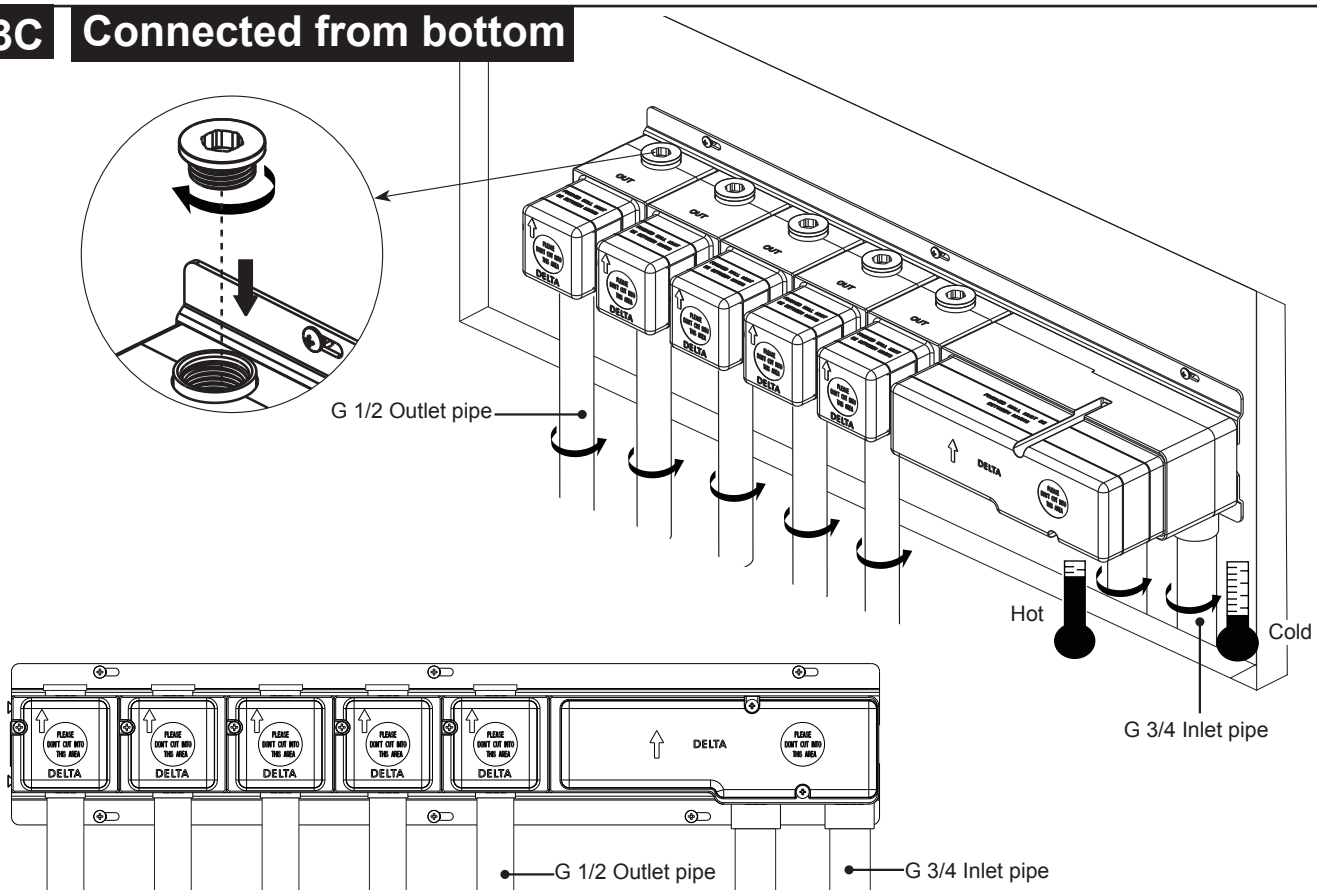

MAKE CONNECTIONS TO WATER LINES.
Install adaptor kit to top. Install water inlet pipe and water outlet pipe.

4

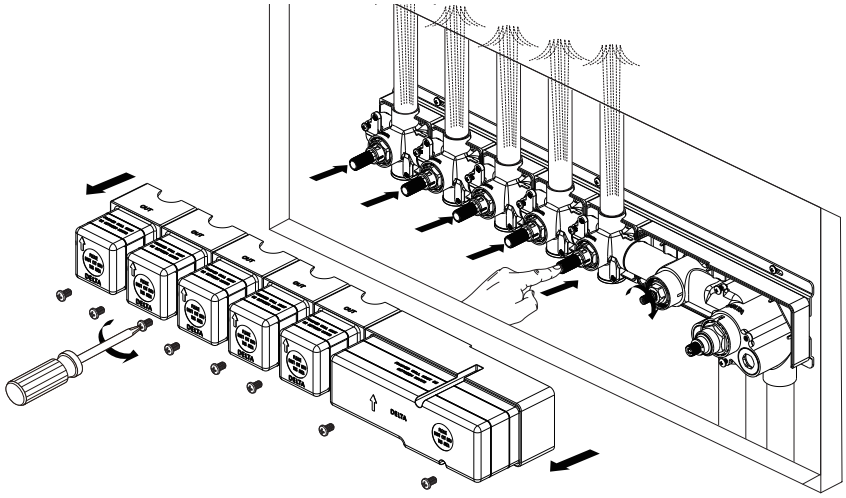

PRESSURE TESTING & FLUSHING. Pull out the protection cover. Press to check the water.

5

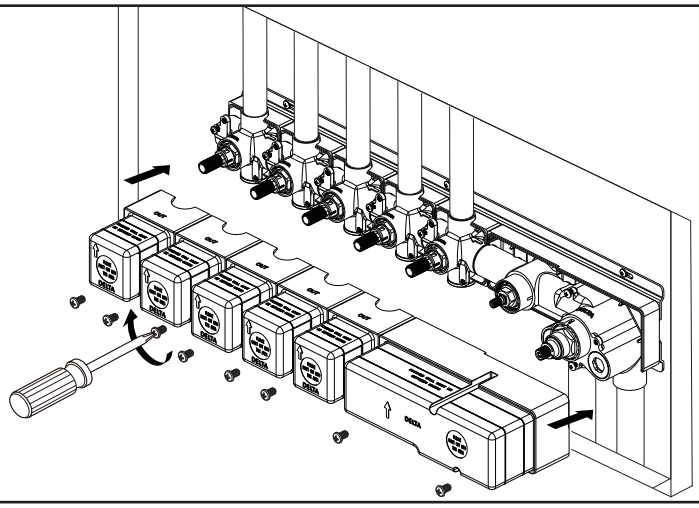

After testing, reinstall protection cover

6

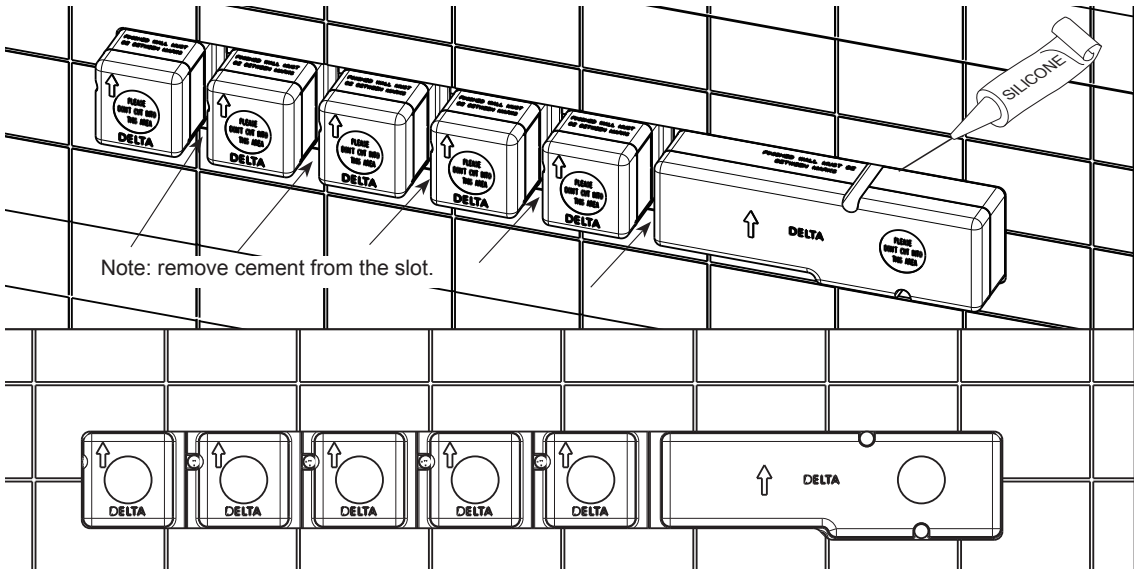

COMPLETE WALL FINISH. Cement filled and tiled. Note: remove cement from the slot.

Model
R97703

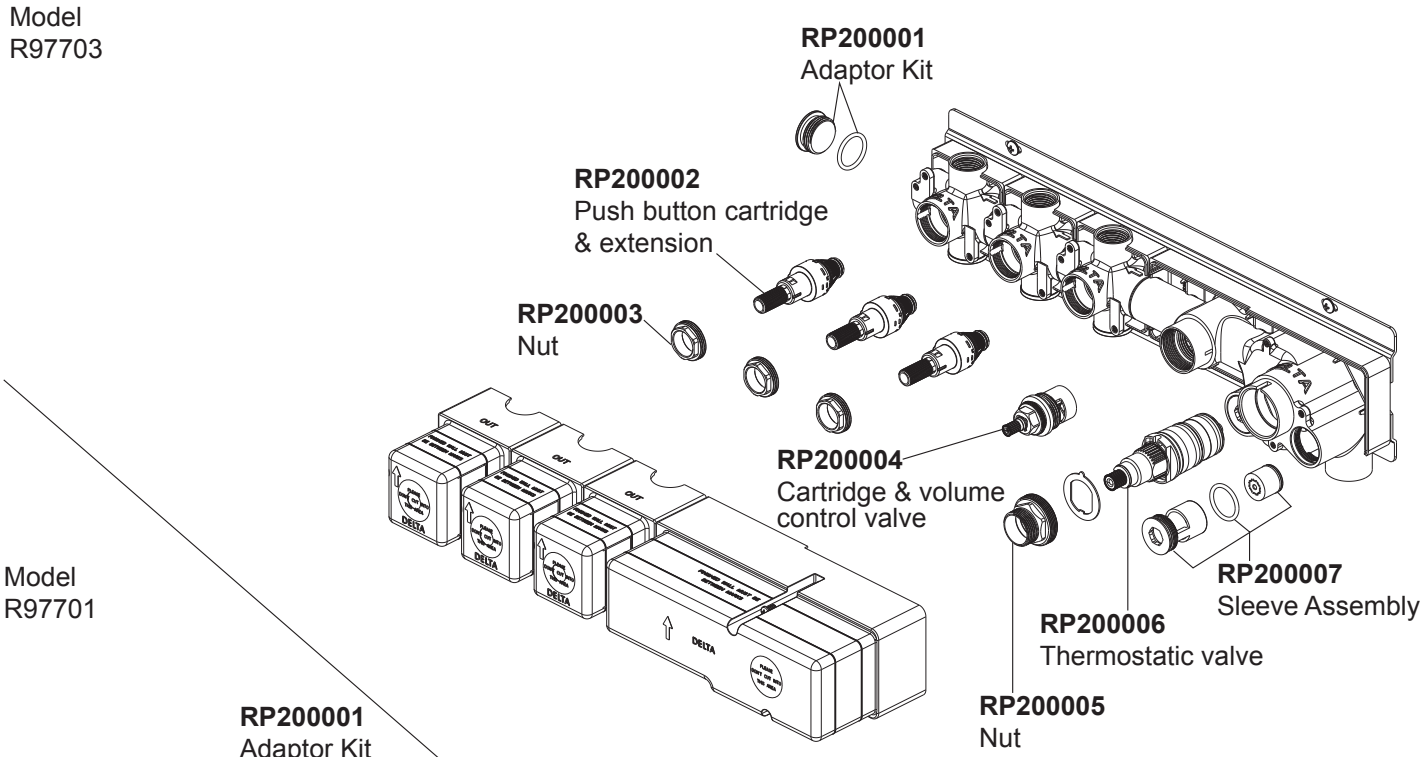

Model
R97701

Model
R97705

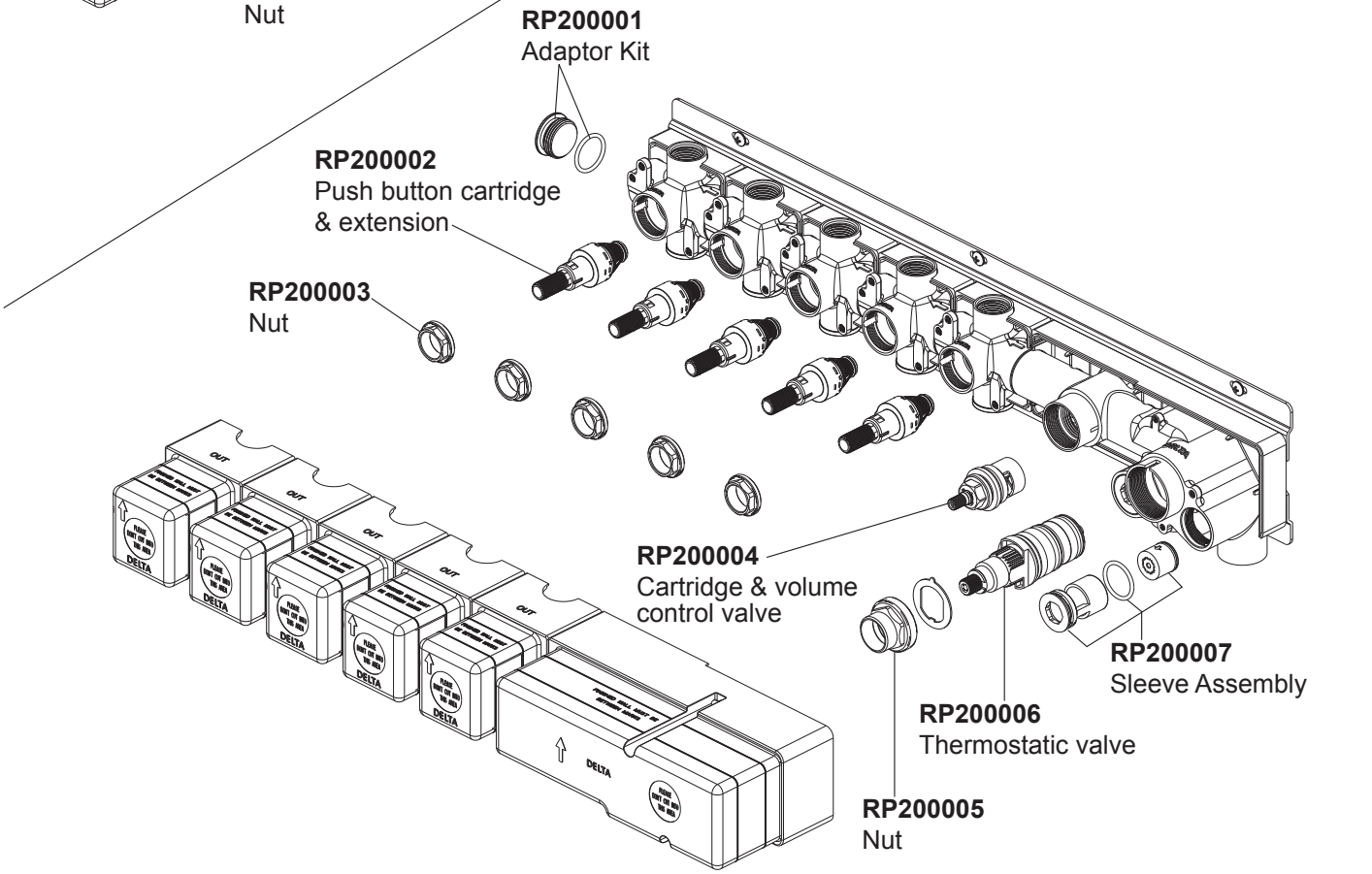

WARRANTY INFORMATION

Delta Faucet Company India Private Limited Limited Warranty on Delta® and Brizo® Residential Faucets, Showers, Hand Showers and Accessories and Delta® Commercial Products

PARTS AND FINISH (RESIDENTIAL PRODUCTS)

All parts (other than electronic parts and batteries, if any) and finishes of each Delta® or Brizo® residential faucet, shower, hand shower or accessory are warranted to the original consumer purchaser for normal residential usage to be free from defects in material and workmanship for a period of ten years from the date of purchase, and to commercial purchasers, for five years from the date of purchase.

ELECTRONIC PARTS AND BATTERIES (IF APPLICABLE) (RESIDENTIAL PRODUCTS)

Electronic parts (other than batteries), if any, of each Delta® or Brizo® residential faucet are warranted to the original consumer purchaser for normal residential usage to be free from defects in material and workmanship for one year from the date of purchase and to commercial purchasers, for one year from the date of purchase. No warranty is provided on batteries.

COMMERCIAL PRODUCTS

All parts and finishes of each Delta® commercial product are warranted to the original purchaser to be free from defects in material and workmanship for a period of five years from the date of purchase unless otherwise specifically stated in the catalog and/or price book.

Delta Faucet Company India Private Limited (Delta India) will repair or replace, during the applicable warranty period, any part or finish that proves defective in material and/or workmanship under normal installation, use and service. If repair or replacement is not practical, Delta India may elect to replace the product with a similar product of comparable value in exchange for the return of the product. For products installed or otherwise located within the municipal limits of any city in which Delta India has an authorized service location, Delta India will also bear the costs and expenses of travel, labor and installation charges incurred by such location's authorized service personnel in connection with the repair/service/replacement of the product in accordance with the warranty above. These are your exclusive remedies.

This Warranty does not cover hoses, rubber components and other consumables and will not be extended as a result of repair or replacement of the product.

Delta India recommends using a professional plumber for all installation and repair. We also recommend that you use only genuine Delta® or Brizo® replacement parts.

Delta India shall not be liable for, and this Warranty does not cover, any damage to the product resulting from (1) misuse, abuse, neglect or improper or incorrectly performed installation, maintenance or repair, (2) low or high water pressure or water impurities, or (3) failure to follow the applicable care and cleaning instructions, including the use of abrasive cleansers, ammonia, bleach, acids, alcohol or other products not recommended for use on chrome products. For products installed or otherwise located outside of the municipal limits of any city in which Delta India has an authorized service location, Delta India shall also not be liable for, and the customer shall bear, any and all costs and expenses that are incurred for repair/service/replacement of the product in accordance with the warranty above, including but not limited to (a) any travel, labor and installation charges by service personnel, and (b) any freight costs incurred for transportation (to and/or from Delta India) of damaged/defective and replacement products/parts/components.

Warranty service or replacement parts may be obtained by contacting your local distributor or Delta Faucet Company India Private Limited in writing or by email or phone as follows:

Delta Faucet Company India Private Limited
Unit No. 1061/1062, 10th Floor, Tower B1, Spaze IT Park, Sector 49
Sohna Road, Gurgaon 122018
customercareindia@deltafaucet.com
Customer Care Phone No. 0.81305.18936

Proof of purchase (original sales receipt and warranty copy with dealer signature) from the original purchaser along with the damaged product must be made available to Delta India for all warranty claims. This Warranty applies only to Delta® and Brizo® products sold in India directly by, or through authorized distributors of, Delta India.

EXCEPT AS OTHERWISE EXPRESSLY PROVIDED ABOVE, AND TO THE EXTENT PERMITTED BY APPLICABLE LAW, DELTA FAUCET COMPANY INDIA PRIVATE LIMITED SHALL NOT BE RESPONSIBLE FOR, AND THIS WARRANTY DOES NOT COVER, SPECIAL, INCIDENTAL OR CONSEQUENTIAL DAMAGES, INCLUDING LABOR AND REMOVAL/INSTALLATION COSTS. Some countries do not allow the exclusion or limitation of special, incidental or consequential damages, so these limitations and exclusions may not apply to you. This warranty gives you specific legal rights, and you may also have other rights which vary from country to country.

This is Delta Faucet Company India Private Limited's exclusive written warranty and the warranty is not transferable.

If you have any questions or concerns regarding our warranty, please write, email or phone us at the addresses or phone number above.