resideo

R8239A,B and D Fan Centers and Q633A Plate-Mounted Receptacle

INSTALLATION INSTRUCTIONS

APPLICATION

These R8239 Fan Centers provide low voltage control of line voltage fan motors and auxiliary circuits in heating, cooling or heating-cooling systems. The fan centers include a R8222 Relay and a NEMA type D, 38 VA transformer for powering 24 volt control circuits, except as noted in Table 1.

The Q633A Plate-Mounted Relay Receptacle is for mounting an R4222, R8222, R4228, or R8228 and an AT72D Transformer. Q633A includes relay receptacle, cover, labels, leadwires, and 4 x 4 in. (102 x 102 mm) plate for outlet box mounting.

See Table 1 below for model specifications.

SPECIFICATIONS

Contact Ratings (For both N.O. and N.C contracts):

R823A,B,D		
	120 VAC	**208/240 Vac**
Full Load	12 A	6 A
Locked Rotor	60 A	35 A

Meets U.L. 3/4 hp requirement.

Pilot Duty Ratings for R8239D Only:
Minimum: 3 VA at 24, 120, 240, and 480 Vac
Maximum: 25 VA at 24 Vac; 125 VA at 120, 240, and 480 Vac
Resistive: 3 A at 277 Vac (0.75 power factor)
Powerpile (millivoltage): The N.O. pilot duty contacts are rated for millivoltage applications: 0.25 A at 0.25 to 12 Vdc

Relay Coil Ratings for R8239A,B,D:
Inrush: 20 VA maximum
Sealed: 9 VA
Wattage: 5 Watts
Pickup Voltage: Must pick up below 18 volts.
Voltage and Frequency: 24 Vac, 50/60 Hz.

Table 1. Model Specifications.

Fan Center Order Number	Relay	Transformer	Switching	Application	Comments
R8239A1052	Includes an R8222B Relay.	Includes a transformer with 120 V primary and 26.5 V secondary voltage.	SPDT	For single- and two-speed fan.	
R8239B1043	Includes an R8222D Relay.	Includes a transformer with 120 V primary and 26.5 V secondary voltage.	DPDT	For system with F50 Electronic Air Cleaner, humidifier and blower motor.	
R8239B1076	Includes an R8222D Relay.	Includes a transformer with 120/208/240 V primary and 26.5 V secondary voltage.	DPDT	For system with F50 Electronic Air Cleaner, humidifier and blower motor.	50 VA transformer
R8239D1015	Includes an R8222U Relay.	Includes a transformer with 120 V primary and 26.5 V secondary voltage.	DPST (one power one pilot duty)	For single-speed fan and pilot duty circuit (24 Vac or millivotage).	
Q633A1007	Use with an R4222, R8222, R4228, or R8228 Relay.	Use with an AT72D Transformer.	Depends on the relay used.		

INSTALLATION

When Installing This Product...

1. Read these instructions carefully. Failure to follow them could damage the product or cause a hazardous conditions.
2. Check the ratings given in the instruction and on the product to make sure the product is suitable for your application.
3. Installer must be a trained, experienced service technician.
4. After installation is complete, check out product operations as provided in these instructions.

⚠ CAUTION

Disconnect power supply before beginning installation to prevent electrical shock or equipment damage.

Mounting and Wiring

R8239

NOTE: The fan center may be mounted in any position. Mounting with relay terminals pointing down will increase pickup voltage by 12 percent.

The R8239 mounts on a standard 4 x 4 in. (102 x 102 mm) outlet box.

All wiring must comply with local codes and ordinances.

Disconnect power before making wiring connections to prevent electrical shock or equipment damage.

Connect wiring in the outlet box according to the equipment manufacturer's instructions. If instructions are not available, refer to the instructions that follow.

1. Make primary connections to line voltage power supply. On multitap model, make sure you are using correct leads or terminals for available power supply. See Fig. 1.
2. On multitap model, insulate ends of unused leads by taping or capping with a solderless connector.

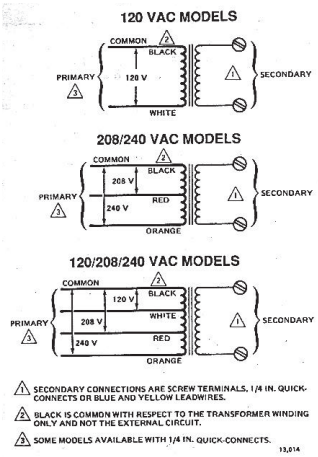

Fig. 1. Schematic for single and multitap transformers.

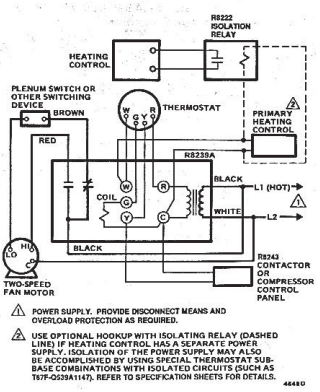

Fig. 2. Internal schematic and typical hookup for R8239A with two-speed fan in heating-cooling system.

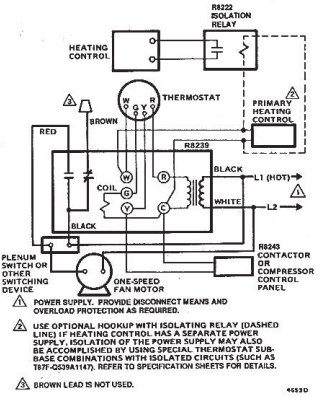

Fig. 3. Internal schematic and typical hookup for R8239A with single-speed fan in heating-cooling system.

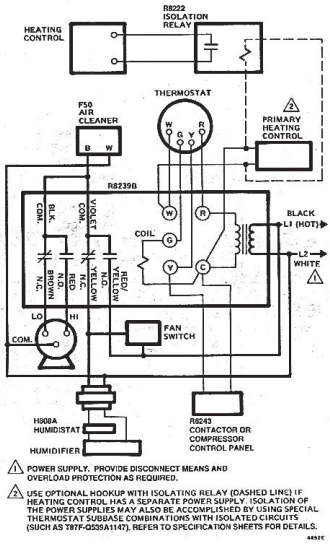

Fig. 4. Internal schematic and typical hookup for R8239B with two-speed fan in "Total Comfort" application with electronic air cleaner, humidifier and blower motor.

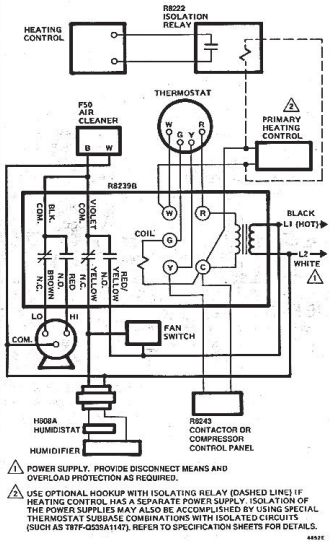

Fig. 5. Internal schematic and typical hookup for R8239D with single-speed fan in heating-cooling system and pilot duty contacts to power auxiliary circuit.

3. Make secondary connection to 24 Vac control circuit.
4. Refer to Figs. 2-5 for internal schematic and typical hookup diagrams.

When wiring is complete, fasten the fan center to outlet box using the screws provided.

Q633A

On Q633A, select and mount the appropriate relay (see Table 1) and AT72D Transformer, if desired.

NOTE: If a relay with line voltage coils is used in the Q633A, apply electrically tape to the inside of the metal relay cover as indicated in Fig. 6.

Leadwires are provided with the Q633A to make relay connections in the box easier. Insert the required for the relay and the desired application.

1. Use Fig. 8 to determine the leadwires required for the relay and the desired application.
2. Align the tang on the leadwire quick-connect terminal with the small clearance slot in the terminal opening (see Fig. 7).
3. Push the leadwire terminal into the receptacle plate from the side stamped with the color code.
4. Press the terminal in until it locks place. Attach the relay cover and apply the label (low voltage models only) that identifies the relay used.

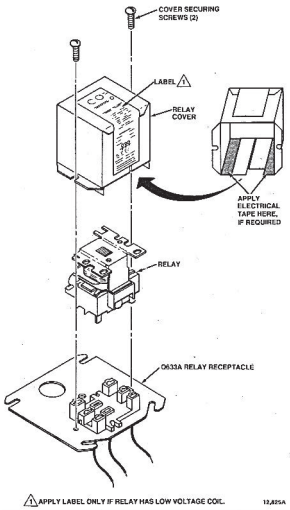

Fig. 6. Mounting and wiring relay to Q633A Relay Receptacle.

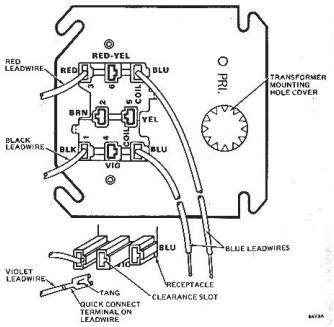

Fig. 7. Bottom of relay receptacle showing leadwire hookup.

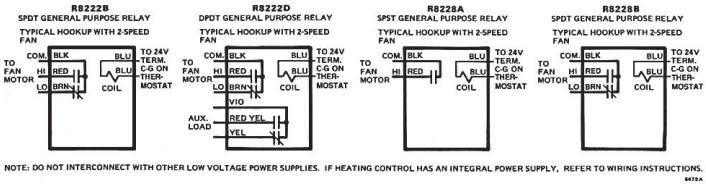

Fig. 8. Typical relay wiring hookups for Q633A plate-mounted relay receptacle.

CHECKOUT

Checkout

When installation is complete, operate the system at least one complete cycle (for both heating and cooling, if applicable) according to the manufacturer's instructions. Make sure system operates as intended.

Service

The relay in the R8239 Fan Center is field-replaceable. Refer to Table 1 for the appropriate replacement. To replace the relay, refer to Fig. 9 and proceed as follows:

1. Disconnect power supply before beginning replacement to prevent electrical shock or equipment damage.
2. Remove the two screws securing the cover to the relay.
3. Remove relay cover.
4. Removed the plug-in relay from the receptacle and replace with new relay.
5. Replace relay cover and two screws removed in step 2.

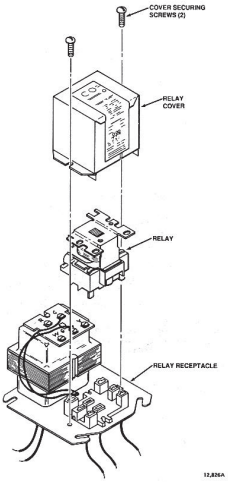

Fig. 9. Replacing the relay in the R8239 Fan Center.

resideo
www.resideo.com
Resideo Technologies, Inc.
1985 Douglas Drive North, Golden Valley, MN 55422
1-800-468-1502
60-0229—09 M.S. Rev. 06-20 | Printed in United States

© 2020 Resideo Technologies, Inc. All rights reserved.
This product is manufactured by Resideo Technologies, Inc. and its affiliates.