Installation Manual
Manual de Instrucciones
Manuel D'Installation

TOTO®

CST243
CST244
CST404
CST423
CST424
CST453
CST454
CST494
CST743
CST744
CST754
CST784

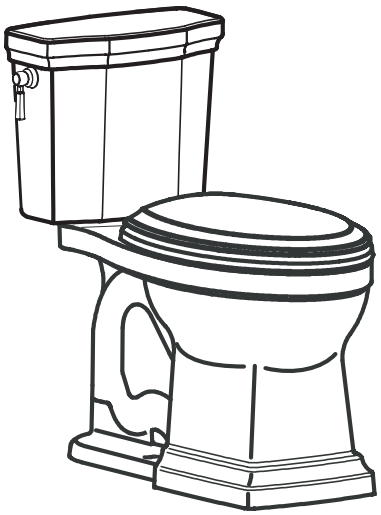

* Actual parts may appear different from drawing according to the model.
* El producto real puede variar en apariencia dependiendo del modelo.
* Le produit réel peut varier en apparence en fonction du modèle.

Warranty Registration and Inquiry
For product warranty registration, TOTO U.S.A. Inc. recommends online warranty registration. Please visit our web site http://www.totousa.com. If you have questions regarding warranty policy or coverage, please contact TOTO U.S.A. Inc., Customer Service Department, 1155 Southern Road, Morrow, GA 30260 (888) 295-8134 or (678) 466-1300 when calling from outside of U.S.A.

TABLE OF CONTENTS

Thanks for Choosing TOTO®! 2
Common Tools Needed 2
Included Parts 2
Before Installation 3
Installation Procedure 3
Care and Cleaning 5
Maintenance Instructions 6
CEFIONTECT® Cleaning Instructions 9
Warranty 10
Rough-In Dimensions 30
Replacement Parts 31

ENGLISH

THANKS FOR CHOOSING TOTO!

The mission of TOTO is to provide the world with healthy, hygienic and more comfortable lifestyles. We design every product with the balance of form and function as a guiding principle. Congratulations on your choice.

COMMON TOOLS NEEDED

- 10" adjustable wrench
- Carpenter's Level
- Hacksaw
- Tape Measure
- Hand Pliers
- Flat Screwdriver
- Phillips Screwdriver
- Putty Knife

MATERIALS REQUIRED (NOT INCLUDED):

- Bowl Wax Ring
- Closet Flange Mounting Bolts
  (usually 2 T-bolts, 2 metal washers and 2 nuts)
- Water Supply Line
  (typically 1/2" compression to 7/8" ballcock)
- Toilet Seat (TOTO SoftClose recommended)

INCLUDED PARTS

Check to make sure you have all these parts from the package:

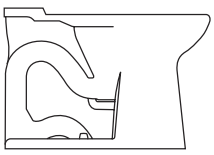
Bowl

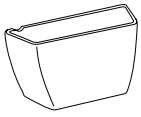
Tank

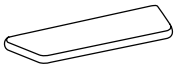
Tank Lid


Tank to Bowl Gasket

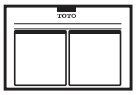

Manual

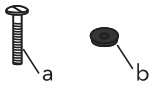

a. Bolts (metal) - 2
b. Washers (rubber) -2

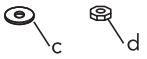

c. Washers (metal) - 4
d. Nuts (metal) -4

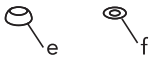

e. Caps (plastic) - 2
f. Base (plastic) - 2

ENGLISH

BEFORE INSTALLATION

- Read these instructions thoroughly before beginning work.
- Please leave instructions for customers. These instruction contain maintenance and warranty information.
- If necessary, remove the existing toilet and if new construction, purge the supply line.

IMPORTANT!
Due to the powerful performance of our Cyclone, G-Max, E-Max and Power Gravity flushing systems, they are not specified for back-to-back installations. The only means of installing these toilets in a back-to-back situation is when the toilet drain connections incorporate a WYE fitting. Please contact your builder or contractor prior to this installation.

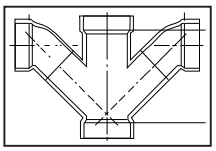

Double Combination WYE / 1/8 Bend
YES

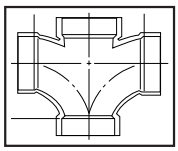

Double Sanitary Tee / Sanitary Cross
NO

For your new TOTO toilet to fit correctly, the rough-in, the distance between the finished wall to the center of the closet flange, must be at least 12 inches for most models.

NOTE: Models with 10" or 14" rough-in have model numbers ending with ".10" or ".14", for example C744EF.10 or C744EF.14. Straight stop type valve, or valve with supply connection on front of angle stop, is not recommended.

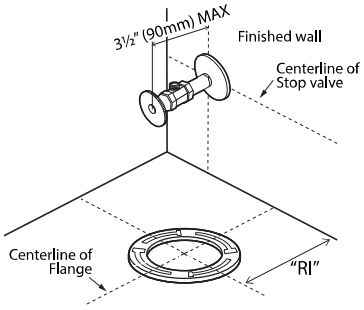

INSTALLATION PROCEDURE

1) Clean any debris out of the closet flange and then install new mounting bolts (not supplied) into the slots of the closet flange (see Illustration 1). The head of the bolt should be inserted into the slot with its threads facing upward.

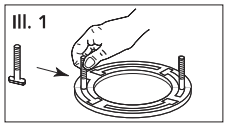

2) Carefully turn the toilet upside down onto some padding. Firmly press a new bowl wax ring (not supplied) onto the circular recess around the toilet bowl's horn (see Illustration 2).

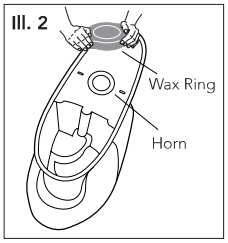

3) Turn the toilet upright and gently lower into position over the closet flange. With toilet properly aligned, press firmly on both sides of toilet rim to set the bowl wax ring (see Illustration 3).

CAUTION: Do not move the bowl after the bowl wax ring is set. Thread the nuts and tighten evenly until bowl is snug to closet flange. Install the bolt caps (see Illustration 3).

CAUTION: Do not over-tighten the nuts as damage to the china bowl may result.

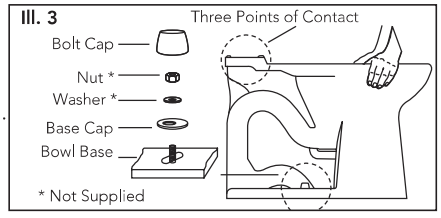

INSTALLATION PROCEDURE

ENGLISH

4) Place the tank upside down onto some padding. Inspect the smaller fill valve nut and larger flush valve nut for a secure connection (see Illustration 4). Try to tighten the nuts with your hands. If loose, tighten the nut hand tight and an additional 1/4 turn for the smaller fill valve nut and an additional 1/2 turn for the larger flush valve nut.

Ill. 4

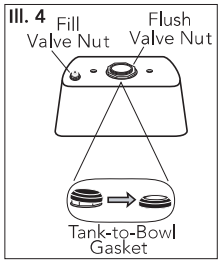

5) Place the tank-to-bowl gasket onto the flush valve nut. While pressing down, spread the gasket over the nut until the gasket touches the bottom of the tank. A slight gap between the tank bottom and the gasket is allowable.

Ill. 5

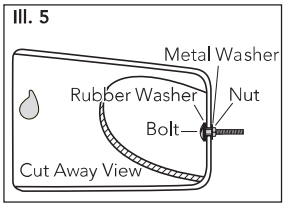

6) Lay the tank down on its back. Place a rubber washer onto a brass bolt (see Illustration 5). Reach inside the tank and position the bolt through one of the holes in the bottom of the tank. On the outside of the tank, place a metal washer and nut onto the bolt. Hold the bolt centered in the hole and tighten the nut finger tight. Turn the nut an additional 1/2 turn with a wrench. Repeat this process for the remaining hole in the tank.

Points of Contact

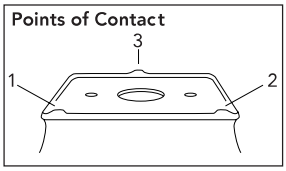

7) Pick up the tank and carefully guide the brass bolts to align the tank with the bowl.

8) Attach a metal washer and nut to each bolt. Tighten the nuts finger tight and inspect that the tank is level (see Illustration 6). Once level, tighten the bolts equally until the tank makes THREE POINTS OF CONTACT with the bowl.

Ill. 6

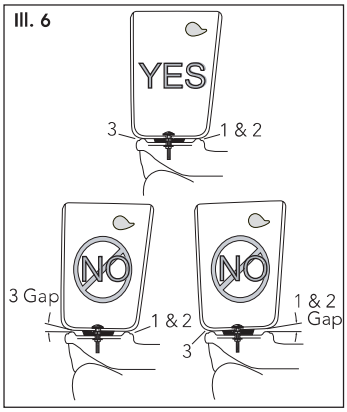

9) Flush the water supply line for a few seconds to remove any debris that may enter the new fill valve. (For new home constructions and/or additions, flush the water supply line for more than a minute to help remove any residual PVC adhesives, solder flux, and/ or pipe sealants that were used for the new plumbing.)

10) Connect the water supply line to the fill valve threads as seen at the bottom of toilet tank (see Illustration 7). Tighten this connection finger tight.

Ill. 7

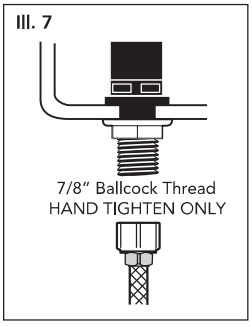

CAUTION: Avoid using a wrench to tighten the connection as you may damage the plastic threads and/or cause the fill valve to rotate inside the tank.

ENGLISH

INSTALLATION PROCEDURE

NOTE: The water supply pressure should be 20 to 80 psi static.

11) Install the flexible water supply hose to the angle stop (ill. 8). Make sure that the hose is free of kinks.

12) Flush toilet a few times to check for issues and leaks. Make sure NO WATER LEAK on bowl and tank.

13) Install the toilet tank lid onto the toilet tank top.

14) Install the toilet seat onto the toilet bowl using the mounting hardware in the toilet seat box (ill.9). Place seat onto bowl and rotate the hinge down. Position seat stoppers under the seat hinge. Insert bolt into seat hinge and through the toilet bowl. Install plastic nut onto bolt from underneath. Tighten the bolt securely. Install the seat bolt caps.

NOTE: Tighten the seat bolt until the hinge is secure. The seat and lid will have slight side to side movement, which is normal. This freedom of movement allows the seat to SoftClose® without binding.

ill.8

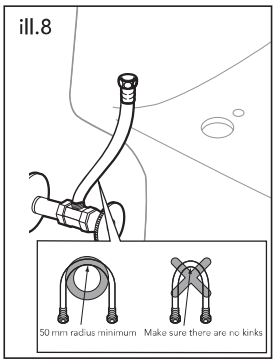

Ill. 9

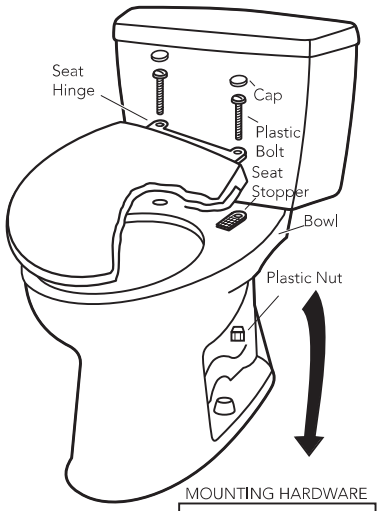

MOUNTING HARDWARE

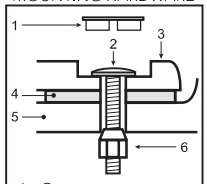

1 - Cap
2 - Plastic Bolt
3 - Seat Hinge
4 - Seat Stopper
5 - Toilet Bowl
6 - Plastic Nut

CARE & CLEANING

Use a detergent or non-abrasive toilet cleaner and a soft bristled plastic brush to clean your toilet. To remove hard water stains, use vinegar or lime dissolving cleaner and a non-scratch scour pad made for porcelain. Allow a little contact time to allow the cleaner to dissolve the buildup.



NOTICE

DO NOT USE IN-TANK BOWL CLEANERS.
The use of high concentration of chlorine or chlorine-related products can seriously damage fittings in the tank. This damage can cause leakage and property damage. TOTO shall not be responsible or liable for any tank fitting failure or damage caused by the use of in-tank bowl cleaners.

MAINTENTANCE INSTRUCTIONS

ENGLISH

Replacing The Fill Valve

1) Shut off the water supply to the toilet.
2) Flush toilet and remove remaining water from tank with a sponge.
3) Remove the water supply connection at the fill valve.
4) Remove old fill valve (note orientation) and use damp sponge to clean hole in tank.
5) Place new fill valve inside tank hole. (recall orientation)
6) Thread mounting nut onto fill valve shank and tighten the nut.

   NOTE: Do not over-tighten. Be sure to install fill valve in a position that does not interfere with the trip lever operation.
7) Connect water supply to fill valve shank and hand-tighten only.

   NOTE: Do not overtighten. These are plastic parts. Never use pipe dope on any water supply connection.
8) Attach refill tube to fill valve nipple and clip other end of refill tube to the overflow pipe.
9) Turn water supply ON and check for leaks outside the tank.

   NOTE: As water fills the tank, water is also directed into the overflow tube via the refill tube. This additional flow of water is critical to refilling your toilet's bowl. Once the water stops filling the tank, some residual drops of water may drip from the fill valve. This is NORMAL as these drops will subside.

Water Level Adjustment

Depending on the manufacturing plant, you may have one of two of the following fill valves:

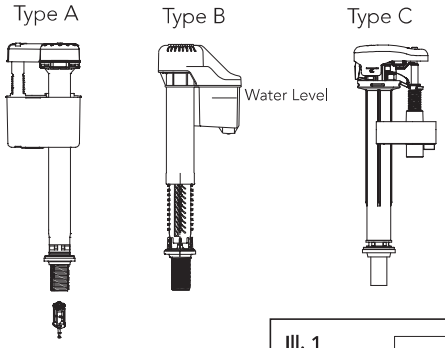

For Type A and C Fill Valve:

Refer to the water level (WL) setting marked on the inner wall of the tank. Allow the water to fill the tank. Turn the adjustment screw clockwise in the (+) direction to increase the water level height (see Illustration 1). Turn the adjustment screw counter-clockwise in the (-) direction to decrease the water level height. Flush the toilet to verify the correct water level. Adjust as necessary.

For Type B Fill Valve:

There are no water level adjustments. The fill valve has been preset at the factory.

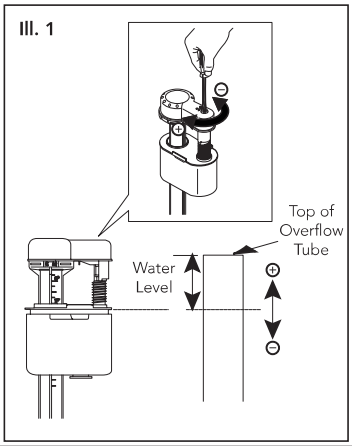

ENGLISH

MAINTENANCE INSTRUCTIONS

Replacing the Flush Valve (ST453U and ST403U Model Tanks)

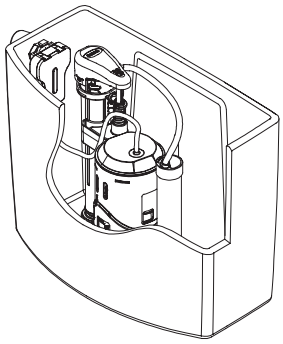

1) Turn off water supply and flush the toilet.
2) Remove the tank lid and place it upside down on a clean surface. Remove the remaining water from tank with a sponge.
3) Pull the clip on top of trip leaver gear box as shown.
4) Pull gear box away and set on the side as shown. (see ill. 1 & ill. 2)
5) Rotate and pull up on the flush tower to remove it. (see ill. 3)
6) Remove the grey rubber seal gasket and rinse under running water to clean. (see. ill. 4)
7) Place the gasket back on the flush tower.
8) Align and place the flush tower into housing and gently press to snap and to lock into place.
9) Replace the trip lever gear box and push down on lever to lock it in place.
10) Check the water level in the tank and inspect for signs of any leakage.
11) Flush the toilet several times making sure the trip lever operates normally.
12) Carefully install the tank lid back on the tank.

Ill. 1

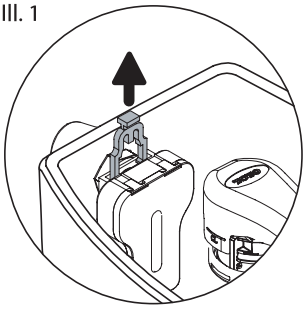

Ill. 2

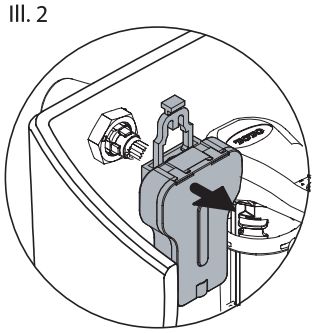

Ill. 3

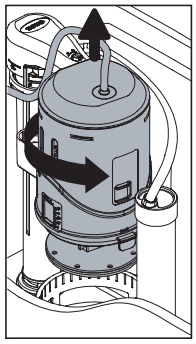

Ill. 4

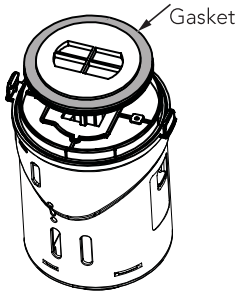

MAINTENANCE INSTRUCTIONS

Replacing the Flush Valve
ST494M (CST494CEMFG)

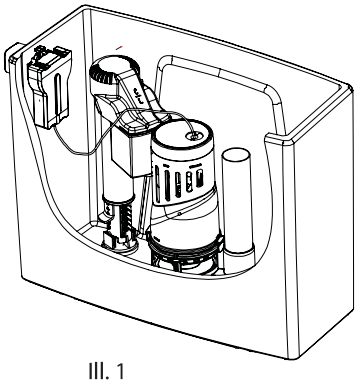

1) Shut off the water supply to the toilet.
2) Flush and remove residual water from the tank with a sponge.
3) Pull the bar on the top of the gear box of the trip lever as shown.
4) Remove the gearbox and set aside, as shown. (see Fig. 1 and Fig. 2)
5) Turn the flush column and reassemble it to remove it. (see Fig. 3)
6) Remove the rubber gasket and rinse under running water to clean. (see III.4)
7) Replace the gasket on the flush column.
8) Align the flush column and place it in the housing, then lightly press down to lock and lock in place.
9) Replace the gearbox of the trigger lever and press the tab to lock it in place.
10) Check the water level in the tank and check for signs of leakage.
11) Flush the toilet several times to make sure the release lever is working normally.
12) Pull the release lever forward for full flush and backward for light flush.
13) Carefully rest the tank lid on the tank.

III. 1

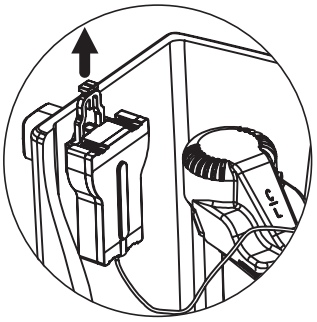

III. 2

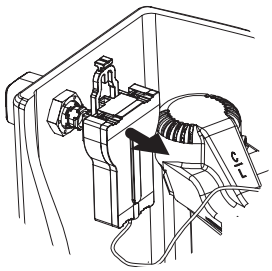

III. 3

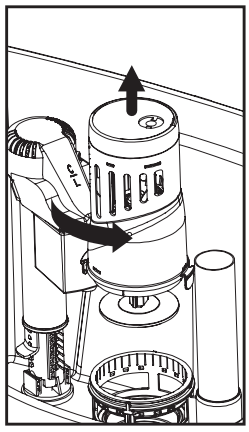

III. 4

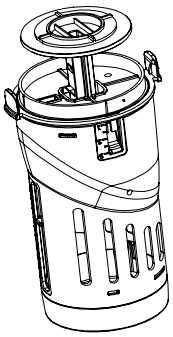

ENGLISH

MAINTENANCE INSTRUCTIONS

Replacing the Drain Valve

1) Shut off the water supply.
2) Flush the toilet to remove the water inside the tank.
3) Remove the tank lid and place somewhere safe.
   NOTE: Before removing anything from the tank, note the placement of the drain valve, chain and refill tube.
4) Unhook the refill tube from the overflow tube of the drain valve.
5) Unhook the chain from the trip lever.
6) Uninstall the tank (refer to the toilet installation manual).
7) Remove the drain valve body from the tank.
8) Replace the drain valve in the same position as the former drain valve.
9) Hand tighten the mounting nut of the drain valve and use a wrench to tighten another 3/4 turn.
10) Reinstall the tank onto the bowl and place the chain and refill tube the same way as it was for the former drain valve.
11) Turn the water supply back.
12) Check for any leakage after the tank has been filled.

ill. 1

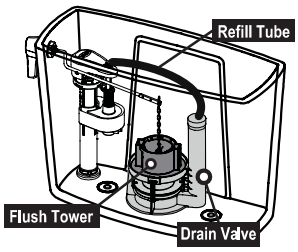

ill. 2

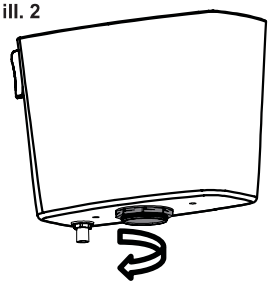

ENGLISH

CEFIONTECT® CLEANING INSTRUCTIONS

WHAT IS CEFIONTECT®?

CEFIONTECT® is TOTO's super-smooth permanent glaze that prevents debris from sticking to surfaces. Products with the letter "G" in the number have the CEFIONTECT® glaze. This glaze, along with regular cleaning, will help keep your TOTO product in pristine condition.



No CEFIONTECT®

NOTE:
For best results to keep your Toto product with CEFIONTECT® clean:
- Lavatory: Use a mild dish detergent with a clean, soft cloth.
- Toilet: Use a gel based cleaner with a soft bristled-plastic brush.
- **Don't use** cleaners, polishing powders or detergents that have gritty or coarse particles.
- **Don't use** bleach, chemical thinners or products that have acid or alkaline detergents listed as ingredients.
- **Don't use** metal scrub brushes or steel wool.



With CEFIONTECT®



Following these instructions will ensure that your TOTO product with the CEFIONTECT® glaze will always stay intact, keeping your product like new for years to come!

ROUGH-IN DIMENSIONS / BOSQUEJO / ROBINETTERIE BRUTE

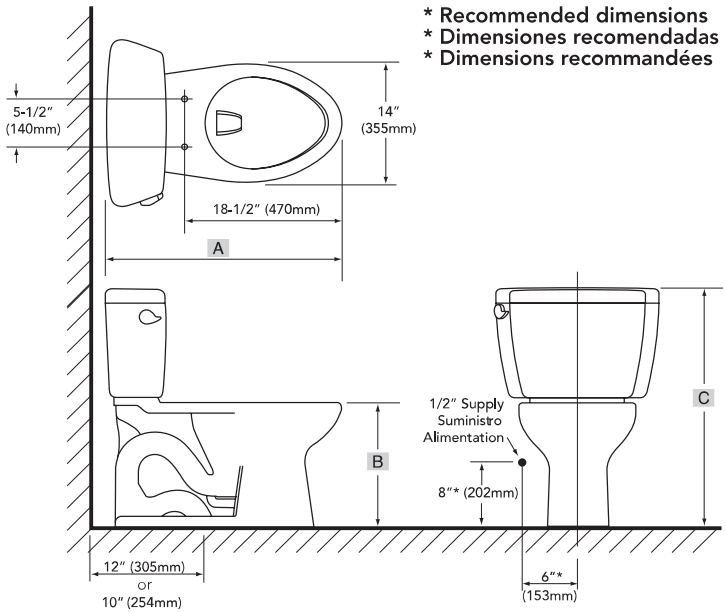

Model	A	B	C
CST243EF	26-7/8"	16-1/8"	30"
CST244EF	28-3/4"	16-1/8"	30"
CST404CEF(G)	28-1/2"	16-1/8"	31-1/4"
CST404CUF(G)	28-1/2"	16-1/8"	31-1/4"
CST423EF(G)	26-3/8"	16-1/8"	33-1/2"
CST424EF(G)	28-1/4"	16-1/8"	33-1/2"
CST453CEF(G)	26-1/2"	16-1/8"	29-1/2"
CST453CUF(G)	26-1/2"	16-1/8"	29-1/2"
CST454CEF(G)	28-1/2"	16-1/8"	29-1/2"
CST454CUF(G)	28-1/2"	16-1/8"	29-1/2"
CST743E	26-3/8"	14-5/8"	28-1/2"
CST743ED	26-3/8"	14-5/8"	28-1/2"
CST744EL	28"	16-1/2"	30-1/2"
CST744ELD	28"	16-1/2"	30-1/2"
CST744EF.10	28"	16-1/8"	30-1/8"
CST744EFD.10	28"	16-1/8"	30-1/8"
CST744E(G)	27-3/4"	14-5/8"	28-1/2"
CST744ED(G)	27-3/4"	14-5/8"	28-1/2"
CST754EF(N)	28-1/8"	16-1/8"	32-1/2"
CST784EF	28-1/2"	16-1/8"	32-1/2"
CST744E(G)N	28-3/8"	14-5/8"	29-1/8"
CST743EN	26-5/8"	14-5/8"	29-1/8"
CST744ELN	28-3/8"	16-1/2"	31-1/8"
CST744EFN.10	28-5/8"	16-1/8"	30-3/4"
CST494CEMF(G)	28-3/4"	16-1/8"	30-1/4"

REPLACEMENT PARTS / REFACCIONES / PIÈCES DE RECHANGE

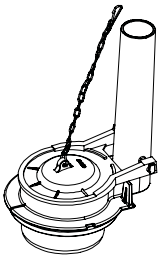

For flapper type drain valve

Model Modelo Modèle	Flapper Tapón Clapet	Fill Valve Válvula de Llenado Robinet de Remplissage (Type A or C)	Fill Valve Válvula de Llenado Robinet de Remplissage (Type B)	Flush Valve Válvula de la Cisterna Soupape de Vidange	Trip Lever Palanca de Descarga Levier de Dèclenchement
ST243E	THU499S	TSU53A	TSU99A.X	THU252P-A	THU068#XX
ST243ER	THU499S	TSU53A	TSU99A.X	THU252P-A	THU279#CP
ST424E	THU499S	TSU53A	TSU99A.X	THU252P-A	THU141N#CP
ST424S	THU499S	TSU53A	TSU99A.X	THU252P-A	THU141NXX
ST453U	9BU094	TSU53A	N/A	THU396	THU390#CP
ST453UR	9BU094	TSU53A	N/A	THU374	THU390#CP
ST454E	THU499S	TSU54A	TSU99A.X	THU252P-A	THU068#XX
ST454ER	THU499S	TSU54A	TSU99A.X	THU252P-A	THU279#XX
ST494M	N/A	N/A	TSU09A.X	THU417	THU416#CP
ST743E(B)	THU499S	TSU53A	TSU99A.X	THU252P-A	THU068#XX
ST743ED(B)	THU499S	TSU53S	TSU99A.X	THU129P-A	THU068#XX
ST743ER(B)	THU499S	TSU53S	TSU99A.X	THU252P-A	THU279#XX
ST743S(B)	THU499S	TSU53S	TSU99A.X	THU129P-A	THU068#XX
ST743SD(B)	THU092-7	TSU53S	TSU99A.X	THU130	THU068#XX
ST743SR(B)	THU499S	TSU53A	TSU99A.X	THU129P-A	THU279#CP
ST744E	THU499S	TSU53S	TSU99A.X	THU252P-A	THU398#CP
ST744ER	THU499S	TSU53S	TSU99A.X	THU252P-A	THU398#CP
ST753E	THU499S	TSU53S	TSU99A.X	THU252P-A	THU141#XX
ST753S	THU499S	TSU53S	TSU99A.X	THU129P-3A	THU141#XX
ST754E	THU499S	TSU53S	TSU99A.X	THU252P-2A	THU141#XX
ST754S	THU499S	TSU53S	TSU99A.X	THU129P-6A	THU141#XX
ST784E	THU499S	TSU53S	TSU99A.X	THU252P-4A	THU148#XX
ST784S	THU499S	TSU53S	TSU99A.X	THU129P-4A	THU148#XX

REPLACEMENT PARTS / REFACCIONES / PIÈCES DE RECHANGE

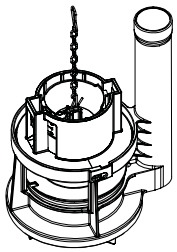

For flush tower type drain valve

Model Modelo Modèle	Drain Valve Válvula de drenaje Valve du drain	Flush Tower Torre de descarga Chasse d'eau	Seal Gasket Junta de sellado Joint d'étanchéité	Fill Valve Válvula de llenado Robinet de remplissage	Trip Lever Palanca de descarga Levier de dèclenchement
ST403E	THU443.15K-A	THU440	THU440-A	TSU53A	THU458N#XX
ST403U	THU467	N/A	THU474	TSU53A	THU466#XX
ST424ET	THU443.21C-A	THU440	THU407	TSU53A	THU141N#CP
ST424ST	THU442.21A-A	THU440	THU407	TSU53A	THU141N#CP
ST454ET	THU445.10F-A	THU440	THU407	TSU53A	THU068#XX
ST454ERT	THU445.10F-A	THU440	THU407	TSU53A	THU279#CP
ST743E(B)T	THU445.10F-A	THU440	THU407	TSU53A	THU068#XX
ST743ED(B)T	THU441.10J-A	THU440	THU407	TSU53A	THU068#XX
ST743ER(B)T	THU445.10F-A	THU440	THU407	TSU53A	THU279#CP
ST743S(B)T	THU443.10B-A	THU440	THU407	TSU53A	THU068#XX
ST743SD(B)T	THU440.15H-A	THU460	THU407	TSU53A	THU068#XX
ST743SR(B)T	THU443.10B-A	THU440	THU407	TSU53A	THU279#CP
ST744ET	THU443.10B-A	THU440	THU407	TSU53A	THU398#CP
ST744ERT	THU443.10B-A	THU440	THU407	TSU53A	TH398#CP
ST753ET	THU444.10D-A	THU440	THU407	TSU53A	THU141#XX
ST754ET	THU445.15G-A	THU440	THU407	TSU53A	THU141#XX
ST784ET	THU444.15E-A	THU440	THU407	TSU53A	THU148#XX